TOWN OF NEW CASTLE, NEW HAMPSHIRE

APPROVAL DRAWINGS

WATER TRANSMISSION MAIN IMPROVEMENTS PROJECT

DWSRF PROJECT NO. 1661010

PREPARED BY

UNDERWOOD ENGINEERS

PORTSMOUTH, NEW HAMPSHIRE

APRIL, 2019

FOR APPROVAL

NOT FOR CONSTRUCTION

LOCATION PLAN

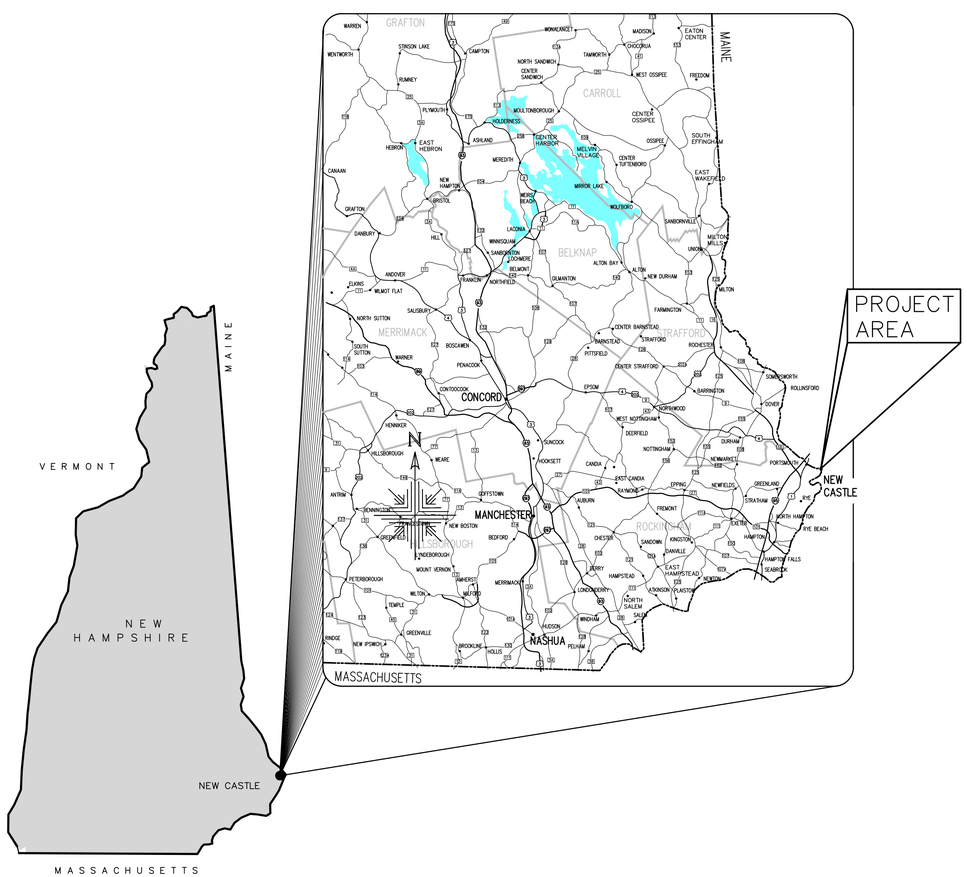

VICINITY MAP

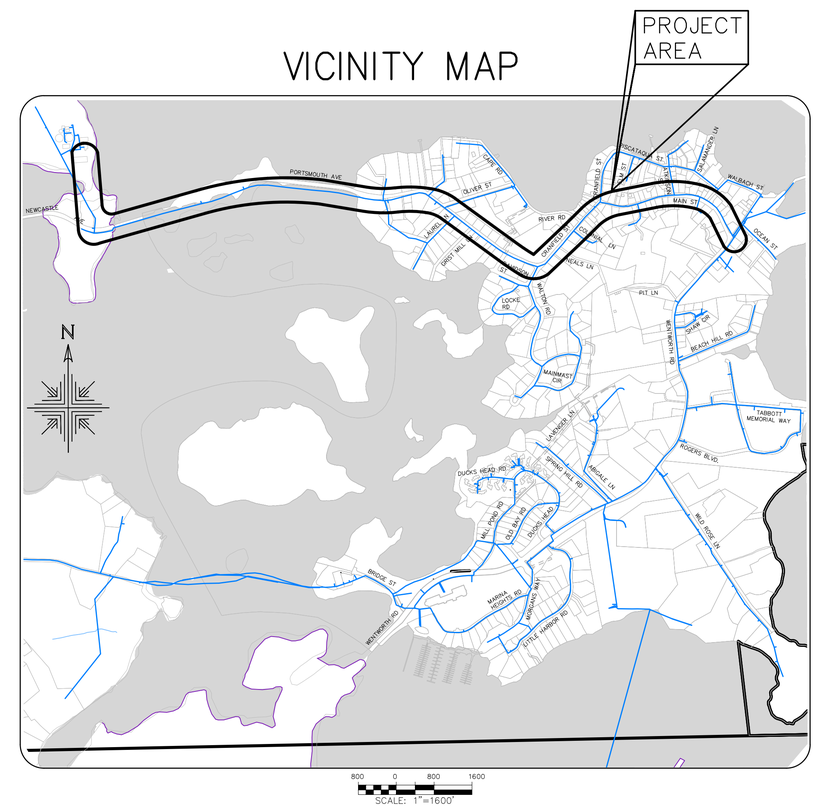

TABLE OF CONTENTS

UE #2331

UNDERWOOD engineers

H:\Real Numbers\New Castle\2331 New Castle Water Main\design drawings\2331_Cover.dwg, CVR, 4/8/2019 1:09:31 PM, rmg

ABUTTERS LIST:

TAX MAP 11, LOT 16
WILLOUGHBY REV.TRUST, ELAINE M
25 PORTSMOUTH AVENUE
NEW CASTLE, NH 03584
R.C.R.D. BOOK 3324 PAGE 665

TAX MAP 11, LOT 17
SCOTT R. SYLVESTER
JEANINE D. SYLVESTER
43 PORTSMOUTH AVE.
NEW CASTLE, NH 03584
R.C.R.D. BOOK 5257 PAGE 1127

TAX MAP 11, LOT 18
WILLAM F. MCCARRON
53 PORTSMOUTH AVE
NEW CASTLE, NH 03584
R.C.R.D. BOOK 5325 PAGE 1129

TAX MAP 11, LOT 19
RUTH A. FRAWLEY
57 PORTSMUTH AVE
NEW CASTLE, NH 03584
R.C.R.D. BOOK 5733 PAGE 0685

TAX MAP 11, LOT 20
JOSEPH P. LAVIN
BARBARA M. LAVIN
65 PORTSMOUTH AVE.
NEW CASTLE, NH 03584
R.C.R.D. BOOK 5126 PAGE 2368

TAX MAP 11, LOT 21
RICHARD H WHITE
JAN R WHITE
73 PORTSMOUTH AVE.
NEW CASTLE, NH 03584

TAX MAP 11, LOT 22
EDMUND J. ARSENAULT III
CATHLEEN R ARSENAULT
79 PORTSMOUTH AVE.
NEW CASTLE, NH 03584

TAX MAP 11, LOT 24
SCOTT D PETTIS
JANET L SYLVESTER
25 GRIST MILL LANE
NEW CASTLE, NH 03584
RCR.D BOOK 3880 PAGE 0689

TAX MAP 11, LOT 37
WILLIAM A. LOMAS
54 PORTSMOUTH AVE.
NEW CASTLE, NH 03584

TAX MAP 11, LOT 38
JAMES & DONNA CERNY
44 PORTSMOUT AVE.
NEW CASTLE, NH 03584
R.C.R.D. BOOK 5590 PAGE 2096

TAX MAP 11, LOT 39
MARVIN CEMETERY
PORTSMOUTH AVE
NEW CASTLE, NH 03584

TAX MAP 12, LOT 8
SUZANNE M. BROWN
COLONIAL LANE
NEW CASTLE, NH 03584
R.C.R.D. BOOK 3393 PAGE 1394

TAX MAP 12, LOT 9
DONALD F. PRIDHAM
KAREN L. PRIDHAM
117 CRANFIELD STREET
NEW CASTLE, NH 03584

TAX MAP 12, LOT 11
DAMON FRAMPTON
THERESA FRAMPTON
10 NEALS LANE
NEW CASTLE, NH 03584
R.C.R.D. BOOK 3193 PAGE 1371

TAX MAP 12, LOT 12
ELISABETH ROBINSON
131 CRANFIELD STREET
NEW CASTLE, NH 03584
R.C.R.D. BOOK 5741 PAGE 0684

TAX MAP 12, LOT 13
DAVID & SALLY MCGUCKIN
141 CRANFIELD STREET
NEW CASTLE, NH 03584
R.C.R.D. BOOK 5575 PAGE 0732

TAX MAP 12, LOT 14
CATHERINE C. GREELEY
BRADFORD W. GREELEY
147 CRANFIELD STREET
NEW CASTLE, NH 03584
R.C.R.D. BOOK 5146 PAGE 2214

TAX MAP 12, LOT 15
LAURIE LORENO
JONATHAN BAILEY
5 WALTON RD
NEW CASTLE, NH 03584

TAX MAP 12, LOT 33
MAUDE H TREFETHEN SCHOOL
144 CRANFIELD STREET
NEW CASTLE, NH 03584
R.C.R.D. BOOK 3456 PAGE 0672

TAX MAP 13, LOT 6
TODD C. BAKER
MELANIE H. BAKER
23 MAIN STREET
NEW CASTLE, NH 03854
R.C.R.D. BOOK 5038, PAGE 1912

TAX MAP 13, LOT 6–2
PAUL HAMBLETT
SUSAN HABERSTROH
3 MAIN STREET
NEW CASTLE, NH 03854
R.C.R.D BOOK 3217, PAGE 1532

TAX MAP 13, LOT 6–3
BRANDON M. TANGUAY
ALYSON B.R. TANGUAY
15 MAIN STREET
NEW CASTLE, NH 03854
R.C.R.D BOOK 5473, PAGE 1165

TAX MAP 13, LOT 7
BICENTINIAL PARK/FIRE STATION
43 MAIN STREET
NEW CASTLE, NH 03854

TAX MAP 13, LOT 8
NEW CASTLE TOWN HALL
49 MAIN STREET
NEW CASTLE, NH 03854

TAX MAP 13, LOT 9
CONGREGATIONAL CHURCH
66 MAIN STREET
NEW CASTLE, NH 03854

TAX MAP 13, LOT 10
CONGREGATIONAL CHURCH
66 MAIN STREET
NEW CASTLE, NH 03854

TAX MAP 13, LOT 11
CORINNE A.M.L. LE GRANDE–HOGE
79 MAIN STREET
NEW CASTLE, NH 03854
R.C.R.D BOOK 5670, PAGE 2065

TAX MAP 13, LOT 12
MILLER FAMILY REVOCABLE TRUST
SUSAN A. FOLLANSBEE TRUSTEE
85 MAIN STREET
NEW CASTLE, NH 03854
R.C.R.D. BOOK 4840, PAGE 0005

TAX MAP 13, LOT 13
GRANT H. DRUMHELLER
KARINA K. DRUMHELLER
91 MAIN STREET
NEW CASTLE, NH 03854
R.C.R.D. BOOK 3167, PAGE 2491

TAX MAP 13, LOT 14
ROWE, MARION LIVING TRUST
103 MAIN STREET
NEW CASTLE, NH 03854
R.C.R.D. BOOK 3355, PAGE 1232

TAX MAP 13, LOT 16
SCHULTE, F&D FAMILY REVOC TRST
FRANCIS & DEBORAH SCHULTE TRTE
107 MAIN STREET
NEW CASTLE, NH 03854
R.C.R.D. BOOK 5276, PAGE 0789

TAX MAP 13, LOT 17
BOUCHARD, EDWARD & BARBARA TRS
BOUCHARD, E.W. & B.M. TRUST
111 MAIN STREET
NEW CASTLE, NH 03584
R.C.R.D. BOOK 3491, PAGE 1731

TAX MAP 13, LOT 26
COX, SUSANNA FAMILY TRUST
39 WENTWORTH RD
NEW CASTLE, NH 03584
R.C.R.D. BOOK 3203 PAGE 1598

TAX MAP 13, LOT 27
MARK CONNOLLY TRUST
55 WENTWORTH ROAD
NEW CASTLE NH 03584
R.C.R.D BOOK 3330 PAGE 2455

TAX MAP 13, LOT 28
THOMAS E. & KATHLEEN A. CONNEEN
WENTWORTH ROAD
NEW CASTLE, NH 03584

TAX MAP 14, LOT 1
MICHAEL G. BARBAGALLO
CHRISTINE E. BARBAGALLO
350 PORTSMOUTH AVE.
NEW CASTLE, NH 03584
R.C.R.D. BOOK 5632 PAGE 2252

TAX MAP 14, LOT 6
NH FISH & GAME DEPT.
PORTSMOUTH AVE.
NEW CASTLE, NH 03584
R.C.R.D. BOOK 3544 PAGE 2911

TAX MAP 14, LOT 7
MARSHALL CARROLL JR.
396 PORTSMOUTH AVE.
NEW CASTLE, NH 03584
R.C.R.D. BOOK 5602 PAGE 1564

TAX MAP 14, LOT 8
GLENN E. KOSCH
372 PORTSMOUTH AVE.
NEW CASTLE, NH 03584
R.C.R.D. BOOK 4655 PAGE 2984

TAX MAP 14, LOT 9
ISLAND CLUB OF NEW CASTLE
358 PORTSMOUTH AVENUE
NEW CASTLE, NH 03584

TAX MAP 14, LOT 10
MICHAEL & CHRISTINE BARBAGALLO
350 PORTSMOUTH AVE.
NEW CASTLE, NH 03584
R.C.R.D. BOOK 5437 PAGE 0362

TAX MAP 14, LOT 11
PULL & B.D., INC.
C/O K LOOSER
334 PORTSMOUTH AVENUE
NEW CASTLE, NH 03584

AX MAP 14, LOT 12
KITTERY POINT YACHT CLUB
328 PORTSMOUTH AVENUE
NEW CASTLE, NH 03584

TAX MAP 14, LOT 13
NICOLE P. BEAURANG
320 PORTSMOUTH AVE.
NEW MARKET NH, 03584
R.C.R.D. BOOK 5641 PAGE 1783

TAX MAP 15, LOT 1
JDF REALTY, LLC
161 PORTSMOUTH AVE
NEW CASTLE, NH 03584
R.C.R.D. BOOK 5537 PAGE 333

TAX MAP 15, LOT 3
PHILIP T. FINN
JANE T. FINN
169 PORTSMOUTH AVE.
NEW CASTLE, NH 03584

TAX MAP 15, LOT 4
HOLLY A. FRAUMENI
183 PORTSMOUTH AVE.
NEW CASTLE, NH 03584

TAX MAP 15, LOT 5
STEPHEN D. ELDRED
180 PORTSMOUTH AVE.
NEW CASTLE, NH 03584
R.C.R.D. BOOK 5489 PAGE 2938

TAX MAP 15, LOT 8
THOMAS & BONNIE BROWN
164 PORTSMOUTH AVE.
NEW CASTLE, NH 03584
R.C.R.D. BOOK 5565 PAGE 1762

TAX MAP 15, LOT 8A
ALAN WESTON
168 PORTSMOUTH AVE.
NEW CASTLE, NH 03584
R.C.R.D. BOOK 4779 PAGE 2613

TAX MAP 15, LOT 9
NEAL–TOOMEY CORP.
C/O JOAN HAMMOND
158 PORTSMOUTH AVE.
NEW CASTLE, NH 03584

TAX MAP 15, LOT 10
RIVERSIDE CEMETERY
PORTSMOUTH AVE.
NEW CASTLE, NJ 03584

TAX MAP 16, LOT 1
THOMAS MCCORMACK
REBECCA VARNER
93 PORTSMOUTH AVE
NEW CASTLE, NH 03584
R.C.R.D. BOOK 2639 PAGE 0106

TAX MAP 16, LOT 2
ELLEN B GARVEY
101 PORTSMOUTH AVE
NEW CASTLE, NH 03584
R.C.R.D. BOOK 4988 PAGE 1425

TAX MAP 16, LOT 5
SHERYL A. WESTON
ROBERT C WESTON
2 LAUREL LANE
NEW CASTLE, NH 03584

TAX MAP 16, LOT 6
GAIL SPIVEY
119 PORTSMOUT RD
NEW CASTLE, NH 03584
R.C.R.D. BOOK 4662 PAGE 1323

TAX MAP 16, LOT 7
PHYLLIS L. STIBLER
125 PORTSMOUTH AVE.
NEW CASTLE, NH 03584
R.C.R.D. BOOK 3513 PAGE 2496

TAX MAP 16, LOT 9
EDMUND C TARBELL
148 PORTSMOUTH AVENUE
NEW CASTLE, NH 03584
R.C.R.D. BOOK 5428 PAGE 66

TAX MAP 16, LOT 11
JULIA P. TARBELL
ANDRIUS A. KETURAKIS
146 PORTSMOUTH AVE.
NEW CASTLE, NH 03584
R.C.R.D. BOOK 5226 PAGE 1643

TAX MAP 16, LOT 21
ELIZABETH WINN. THAYER
134 PORTSMOUTH AVE.
NEW CASTLE, NH 03584

TAX MAP 16, LOT 22
JESSE L. AMBROSE
CHRISTINE B AMBROSE
3 OLIVER STREET
NEW CASTLE, NH 03584
R.C.R.D BOOK 5576 PAGE 2486

TAX MAP 16, LOT 42
MARGARET L. RIFFE
4 OLIVER STREET
NEW CASTLE, NH 03584
R.C.R.D. BOOK 3327 PAGE 527

TAX MAP 16, LOT 43
BARBARA TARBELLS
96 PORTSMOUT AVE.
NEW CASTLE, NH 03584

TAX MAP 16, LOT 44
MICHAEL L. ARMITAGE
86 PORTSMOUTH AVE.
NEW CASTLE, NH 03584
R.C.R.D. BOOK 4265 PAGE 2922

TAX MAP 16, LOT 45
MICHAEL GEANOULIS SR.
78 PORTSMOUTH AVE.
NEW CASTLE, NH 03584
R.C.R.D. BOOK 5585 PAGE 2357

TAX MAP 16, LOT 46
IAN MOODIE
KATHERINE MOODIE
62 PORTSMOUTH AVE.
NEW CASTLE, NH 03584
R.C.R.D. BOOK 5858 PAGE 2275

TAX MAP 16, LOT 49
JOHN & PATRICIA WOOD
147 PORTSMOUTH AVE.
NEW CASTLE, NH 03584
R.C.R.D. BOOK 5731 PAGE 1488

TAX MAP 17, LOT 1
CHARLES W. & LINDA D. MCINTYRE
119 MAIN STREET
NEW CASTLE, NH 03584

TAX MAP 17, LOT 5
CUETARA/ROSSI REVOC TRUST
CUETARA, JOSEPH P
127 MAIN STREET
NEW CASTLE, NH 03584
R.C.R.D. BOOK 3886 PAGE 1120

TAX MAP 17, LOT 6
EDWARD BARTON JR
133 MAIN STREET
NEW CASTLE, NH 03584
R.C.R.D. BOOK 5297 PAGE 0955

TAX MAP 17, LOT 7
RODERICK M. MACDONALD
SUSAN O. MACDONALD
145 MAIN STREET
NEW CASTLE, NH 03584

TAX MAP 17, LOT 8
JOHN & JANET HARRIGAN
155 MAIN STREET
NEW CASTLE, NH 03584
R.C.R.D. BOOK 5818 PAGE 0117

TAX MAP 17, LOT 9
DANIEL S. JACKSON
57 CRANFIELD RD
NEW CASTLE, NH 03584
R.C.R.D. BOOK 5072 PAGE 2690

TAX MAP 17, LOT 10
ROBI & JOHN JACKSON
63 CRANFIELD RD
NEW CASTLE, NH 03584
R.C.R.D. BOOK 5873 PAGE 1887

TAX MAP 17, LOT 11
CHRISTOPHER P &
LEANNE L. WHALEN
69 CRANFIELD RD
NEW CASTLE, NH 03584
R.C.R.D. BOOK 5717 PAGE 0185

TAX MAP 17, LOT 12
RICHARD & LUCINDA YEATON
CRANFIELD STREET
NEW CASTLE, NH 03584
R.C.R.D. BOOK 3267 PAGE 2170

TAX MAP 17, LOT 13
JAMES T. RYAN
PATRICIA S. RYAN
81 CRANFIELD RD
NEW CASTLE, NH 03584
R.C.R.D. BOOK 4680 PAGE 1921

TAX MAP 17, LOT 14
JAY S. BIBSON
MARY P. GIBSON
91 CRANFIELD RD
NEW CASTLE, NH 03584
R.C.R.D. BOOK 5341 PAGE 2897

TAX MAP 17, LOT 17
DANIEL D. SNYDER
JANICE SNYDER
106 CRANFIELD STREET
NEW CASTLE, NH 03584
R.C.R.D. BOOK 4963 PAGE 1337

TAX MAP 17, LOT 18
WAYNE SEMPRINI
PAULETTE SEMPRINI
35 RIVER RD
NEW CASTLE, NH 03584
R.C.R.D. BOOK 5589 PAGE 1055

TAX MAP 17, LOT 19
CLINTON SPRINGER
98 CRANFIELD STREET
NEW CASTLE, NH 03584
R.C.R.D. BOOK 4996 PAGE 1918

TAX MAP 17, LOT 20
JEAN G. TIFFANY
90 CRANFIELD STREET
NEW CASTLE, NH 03584
R.C.R.D. BOOK 5077 PAGE 1170

TAX MAP 17, LOT 22
BARRY & LILIANE HIBBLE
80 CRANFIELD STREET
NEW CASTLE, NH 03584
R.C.R.D. BOOK 5212 PAGE 0932

TAX MAP 17, LOT 23
SUZANNE M. BROWN
74 CRANFIELD STREET
NEW CASTLE, NH 03584
R.C.R.D. BOOK 3508 PAGE 2375

TAX MAP 17, LOT 24
RICHARD & LUCINDA YEATON
68 CRANFIELD STREET
NEW CASTLE, NH 03584
R.C.R.D. BOOK 3267 PAGE 2170

TAX MAP 17, LOT 25
MUD COVE BOAT YARD LLC
62 CRANFIELD STREET
NEW CASTLE, NH 03584
R.C.R.D. 2778 BOOK 1687

TAX MAP 17, LOT 26
MADELEINE ALANA
50 CRANFIELD STREET
NEW CASTLE, NH 03584
R.C.R.D. BOOK 4757 PAGE 0790

TAX MAP 17, LOT 28
DIANE MAXAM
46&48 CRANFIELD STREET
NEW CASTLE, NH 03584
R.C.R.D. BOOK 4971 PAGE 2122

TAX MAP 17, LOT 52
JOSEPH J ALMEIDA
160 MAIN STREET
NEW CASTLE, NH 03584
R.C.R.D. BOOK 5724 PAGE 2415

TAX MAP 17, LOT 53
ANNA R.H. PATTISON
152 MAIN STREET
NEW CASTLE, NH 03584
R.C.R.D. BOOK 5522 PAGE 1703

TAX MAP 17, LOT 55
DIAN T. MACK
144 MAIN STREET
NEW CASTLE, NH 03584
R.C.R.D. BOOK 3317 PAGE 0558

TAX MAP 17, LOT 56
CEMETERY
TOWN OF NEW CASTLE
142 MAIN STREET
NEW CASTLE, NH 03584

TAX MAP 17, LOT 57
CEMETERY
TOWN OF NEW CASTLE
120 MAIN STREET
NEW CASTLE, NH 03584

TAX MAP 17, LOT 58
OLD PUBLIC LIBRARY
TOWN OF NEW CASTLE
120 MAIN STREET
NEW CASTLE , NH 03584
R.C.R.D. BOOK 0790 PAGE 0494

TAX MAP 17, LOT 59
NANCY MCCARTHY
MCCARTHY FAMILY REVOC TRUST
116 MAIN STREET
NEW CASTLE, NH 03584
R.C.R.D. BOOK 5394 PAGE 0306

TAX MAP 18, LOT 1
JACQUELINE F. LALIME
108 MAIN STREET
NEW CASTLE, NH 03584
R.C.R.D. BOOK 5776 PAGE 0481

TAX MAP 18, LOT 3
PAPPAS REVOCABLE TRUST
JAMES M. PAPPAS
104 MAIN STREET
NEW CASTLE, NH 03584
R.C.R.D. BOOK 4324 PAGE 0742

TAX MAP 18, LOT 4
IRA S. SCHWARTZ
JENNIFER C. SCHWARTZ
96 MAIN STREET
NEW CASTLE, NH 03584

TAX MAP 18, LOT 5
SPENCE R LOCKHART
CAROLINE D. LOCKHART
90 MAIN STREET
NEW CASTLE, NH 03584

TAX MAP 18, LOT 6
JOAN LOCKHART
86 MAIN STREET
NEW CASTLE, NH 03584

TAX MAP 18, LOT 50
WALTER W. GLIDDEN
SANDRA L. GLIDDEN
6 ATKINSON STREET
NEW CASTLE, NH 03584
R.C.R.D. BOOK 3917 PAGE 2149

TAX MAP 18, LOT 51
DAVID H MCARDLE REVOC. TRUST
NANCY S. MCARDLE
74 MAIN STREET
NEW CASTLE, NH 03584
R.C.R.D. BOOK 3466 PAGE 2279

TAX MAP 18, LOT 52
JEFFREY M. REILLY
REBECCA J. REILLY
70 MAIN STREET
NEW CASTLE, NH 03584
R.C.R.D. BOOK 4841 PAGE 0607

TAX MAP 18, LOT 53
STREHL, VJ REVOC TRUST OF 2016
62 MAIN STREET
NEW MARKET, NH 03584
R.C.R.D. BOOK 5812 PAGE 2917

TAX MAP 18, LOT 54
FOREST CEMETERY
TOWN OF NEW CASTLE
MAINE STREET
NEWCASTLE, NE 03584

TAX MAP 18, LOT 55
DAVID & NANCY BORDEN
52 MAIN STREET
NEW CASTLE, NH 03584
R.C.R.D. BOOK 4919 PAGE 1327

TAX MAP 18, LOT 56
DOUG & DAN LLC
3 WALBACH STREET
NEW CASTLE, NH 03584
R.C.R.D. BOOK 5769 PAGE 1468

TAX MAP 18, LOT 59
STEPHEN J. ROBERSON
SAMANTHA ROBERSON
42 MAIN STREET
NEW CASTLE, NH 03584

TAX MAP 18, LOT 60
SANDRA S. BISSET
34 MAIN STREET
NEW CASTLE, NH 03584
R.C.R.D. BOOK 1622 PAGE 257

TAX MAP 18, LOT 61
32 MAIN STREET
NEW CASTLE, NH 03584
R.C.R.D. BOOK 5467 PAGE 1755

TAX MAP 18, LOT 62
DAVID M. KOVICK
AMY E. KOVICK
26 MAIN STREET
NEW CASTLE, NH 03584
R.C.R.D. BOOK 5850 PAGE 0930

TAX MAP 18, LOT 63
HOMICZ 1994 TRUST, CATHY E.
8 MAIN STREET
NEW CASTLE, NH 03584
R.C.R.D. BOOK 3174 PAGE 0298

TAX MAP 18, LOT 64–1
LLEWELLYN, PHILIP R REVOC LIVING TRUST
PHILIP R. LLEWELLYN
12 MAIN STREET
NEW CASTLE, NH 03584
R.C.R.D BOOK 5821 PAGE 0623

TAX MAP 205, LOT 3
LINDA R. WALSH
C/O LISA ADE, PCSFI
1000 MARKET ST
PORTSMOUTH, NH 03801
R.C.R.D. BOOK 5229, PAGE 1105

TAX MAP 205, LOT 4
WILLIAM T. MARCONI REV. TRUST
529 NEW CASTLE AVE
PORTSMOUTH, NH 03801
R.C.R.D. BOOK 5772, PAGE 1056

TAX MAP 205, LOT 5
DAVID & CARYL HARVEY
517 NEW CASTLE AVE
PORTSMOUTH, NH 03801
R.C.R.D. BOOK 5694, PAGE 1893

TAX MAP 205, LOT 6
VINCENT J. MARCONI REV. TRUST
501 NEW CASTLE AVE
PORTSMOUTH, NH 03801
R.C.R.D. BOOK 5655, PAGE 157

TAX MAP 208, LOT 1
CITY OF PORTSMOUTH
PO BOX 628
PORTSMOUTH, NH 03802

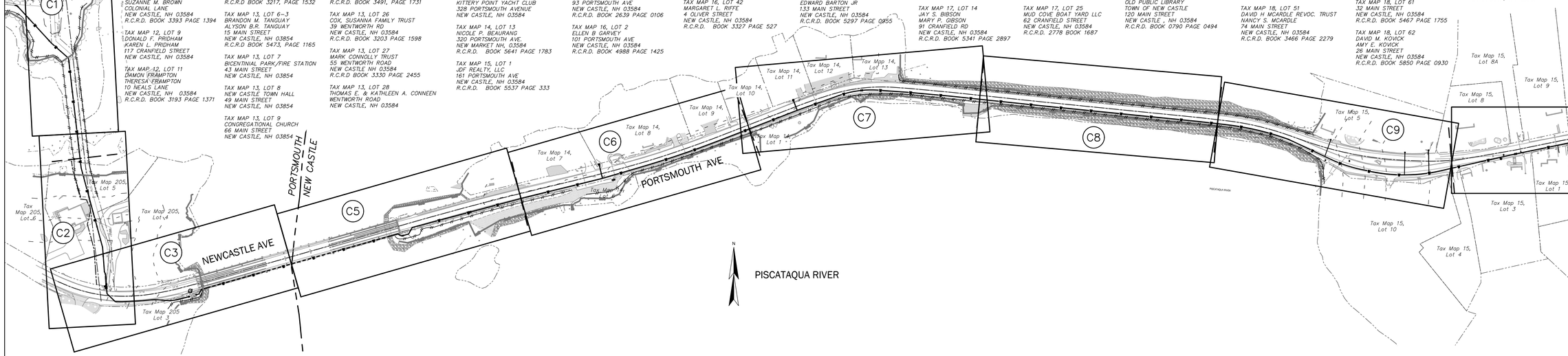

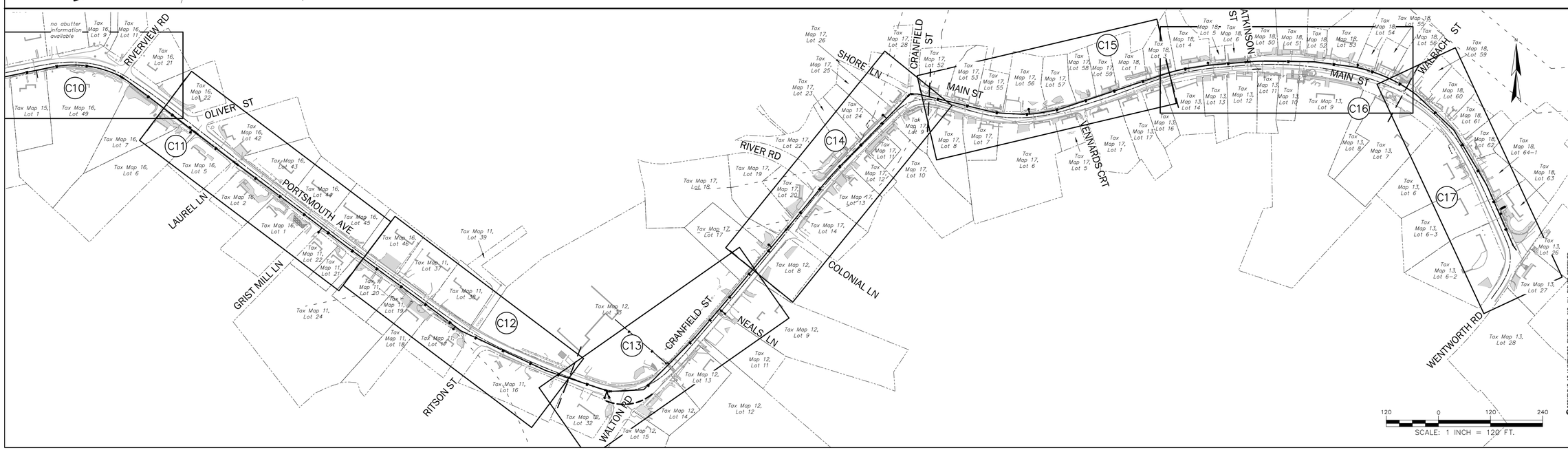

ISSUE FOR	By	Date
APPROVAL	RHR	4/8/2019
CONSTRUCTION	By	Date
	–	–
RECORD DWG	By	Date
	–	–
APP'D		

NO.	REVISIONS
△	
△	
△	
△	
△	
△	

Drawn/Chk RMG
Designed RHR
Checked –
Approved –
Date 3/25/2019
Book No. 2331
Project No. 2331
Dwg. ID 2331_Index
Scale AS SHOWN

FOR APPROVAL
NOT FOR CONSTRUCTION

UNDERWOOD engineers
25 Vaughan Mall, Portsmouth, N.H. 03801
Tel. 603–436–6192 Fax. 603–431–4733

OVERVIEW PLAN & ABUTTERS LIST

WATER TRANSMISSION MAIN IMPROVEMENTS PROJECT
TOWN OF NEW CASTLE
NEW CASTLE, NEW HAMPSHIRE

DWG NO G1
SHEET 2 OF 37

H:\Real Numbers\New Castle\2331 New Castle Water Main\design\drawings\2331_Index.dwg, G1, 4/8/2019 1:09:41 PM, mrg

LEGEND:

EXISTING	PROPOSED	
		STRUCTURES/BUILDINGS
ep		EDGE OF PAVEMENT
		APPROXIMATE PROPERTY LINE PER GIS
		APPROXIMATE EASEMENT
S		GRAVITY SEWER
W	W	WATER LINE
D	D	DRAIN LINE
SFM		SEWER FORCE MAIN
OHW		OVERHEAD WIRE
6		LIDAR MINOR CONTOUR LINE (SEE SURVEY NOTE 12)
10		LIDAR MAJOR CONTOUR LINE (SEE SURVEY NOTE 12)
126		MINOR CONTOUR LINE (GROUND SURVEY)
130		MAJOR CONTOUR LINE (GROUND SURVEY)
126 ×		SPOT ELEVATION (GROUND SURVEY)
126		MINOR CONTOUR (REF. PLAN#3)
130		MAJOR CONTOUR (REF. PLAN#3)
130		PROPOSED CONTOUR (REF. PLAN#3)
		STOCKADE FENCE
		CHAIN LINK FENCE
V		PICKET FENCE
		GUARDRAIL
		STONEWALL
		RETAINING WALL
		WETLAND
		EDGE OF WETLAND (SEE SURVEY NOTE 7)
hotl		HIGHEST OBSERVABLE TIDE LINE (SEE SURVEY NOTE 7)
mlw		MEAN LOW WATER
msl		MEAN SEA LEVEL
mhw		MEAN HIGH WATER
		EDGE OF VEGETATION
		BUSH LINE
		DECIDUOUS TREE
		CONIFEROUS TREE
		BUSH
		STUMP
conc.		CONCRETE
		RIP RAP
		LANDSCAPED AREA
		GRAVEL/CRUSHED STONE
		BRICK
		COBBLESTONE
		SLATE/STONE WALKWAY
		DECK/PORCH
		LEDGE OUTCROP
d.h.f.		DRILL HOLE FOUND
I.P.F. I.R.F.		IRON PIPE – IRON ROD
		FLAG POLE
		LIGHT POLE
		GUY POLE
		GUY WIRE
		UTILITY POLE
		BOULDER
		SIGN
		BOLLARD
		MANHOLE MISC.
		POST

LEGEND:

EXISTING	PROPOSED	
		WATER MANHOLE
		HYDRANT
		WATER SHUT-OFF
wv		WATER VALVE
		BEND FITTINGS (45°, 22.5°, 11.25°)
		TEE FITTING
		COUPLING
		REDUCER
		THRUST BLOCK
		SEWER MANHOLE
		SEWER CLEANOUT
		CATCH BASIN SQUARE
		CATCH BASIN ROUND
		DRAIN MANHOLE
		MAILBOX
		HEADSTONE
typ.		TYPICAL
gran.		GRANITE
"np"		NO PARKING
vgc		VERTICAL GRANITE CURB
sgc		SLOPED GRANITE CURB
vcc		VERTICAL CONCRETE CURB
swl		SINGLE WHITE LINE
syl		SINGLE YELLOW LINE
dyl		DOUBLE YELLOW LINE
1		PHOTO LOCATION & DIRECTION

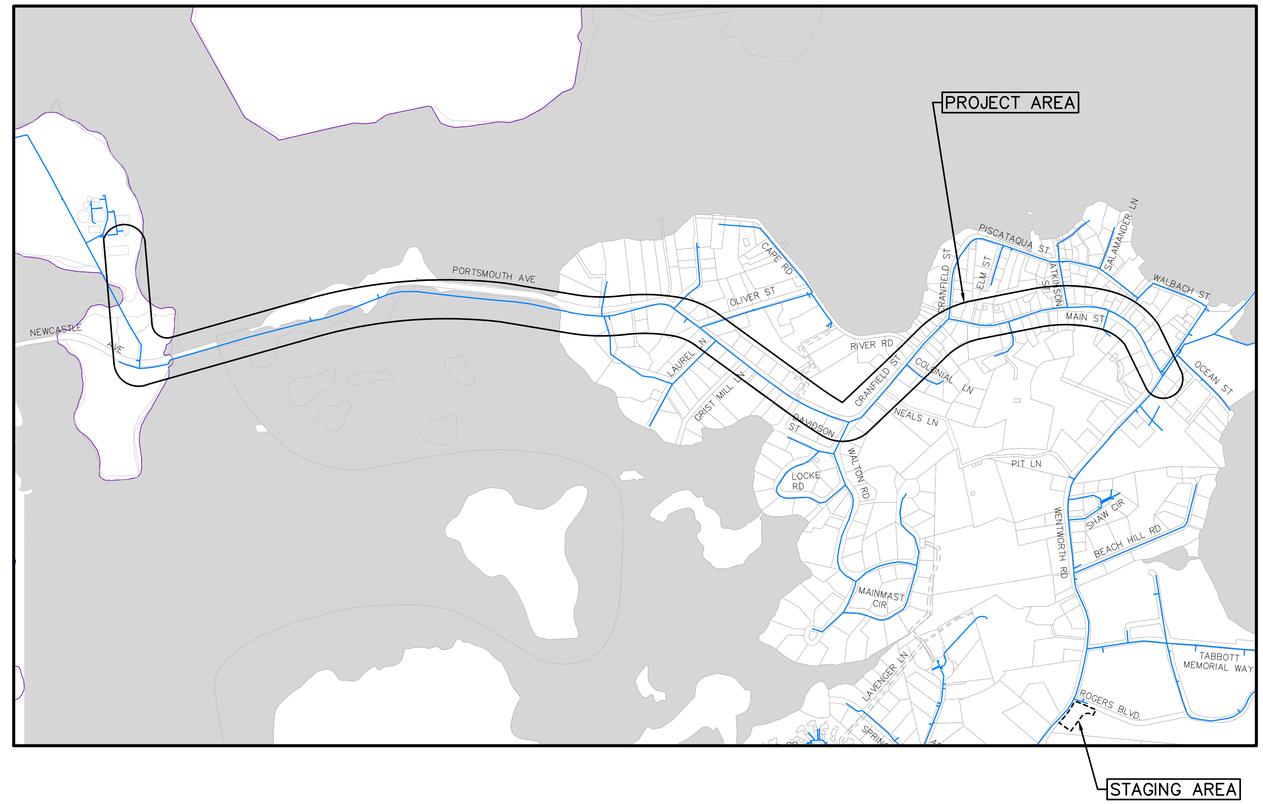

ISSUE FOR		By	APP'D
APPROVAL	Date 4/9/2019	RHR	–
CONSTRUCTION	Date –	By –	
RECORD DWG	Date –	By –	

NO.	REVISIONS

Drawn/Chk RMG
Designed RHR
Checked –
Approved –
Date 3/25/2019
Book No. 2331
Project No. 2331
Dwg. ID 2331_general
Scale AS SHOWN

FOR APPROVAL
NOT FOR CONSTRUCTION

UNDERWOOD engineers
25 Vaughan Mall, Portsmouth, N.H. 03801
Tel. 603-436-6192 Fax. 603-431-4733

LEGEND

WATER TRANSMISSION MAIN IMPROVEMENTS PROJECT

TOWN OF NEW CASTLE
NEW CASTLE, NEW HAMPSHIRE

DWG NO G2

SHEET 3 OF 37

H:\Real Numbers\New Castle\2331 New Castle Water Main\design drawings\2331_General.dwg, G2, 4/8/2019 1:09:59 PM, rmg

GENERAL NOTES

1. THE CONTRACTOR IS RESPONSIBLE FOR THE LOCATION, PROTECTION AND REPAIR (IF DAMAGED) OF ALL EXISTING UTILITIES AND SERVICES. THE APPROXIMATE LOCATIONS OF UTILITIES AND SERVICES ARE SHOWN ON THE DRAWINGS. NOT ALL UTILITIES ARE SHOWN ON THE PLAN. NOTIFY DIG-SAFE PRIOR TO COMMENCING CONSTRUCTION (1-888-344-7233) AT THE REQUIRED FREQUENCY DICTATED BY LAW. CONTRACTOR SHALL GIVE ADEQUATE NOTICE TO THE ENGINEER OF CONFLICTS OF PROPOSED WORK WITH MARKED UTILITIES PRIOR TO CONSTRUCTING THE PROPOSED WORK.

2. THE SURFACE EVIDENCE OF THE UTILITIES SHOWN HAVE BEEN LOCATED BY FIELD SURVEY. THE LINE WORK REPRESENTING THE UNDERGROUND STRUCTURES AND PIPES SHOWN ARE BASED ON SURVEY AND PLANS AVAILABLE. THE ENGINEER/SURVEYOR MAKES NO GUARANTEE THAT THE UNDERGROUND UTILITIES SHOWN COMPRISE ALL SUCH UTILITIES IN THE AREA, EITHER IN SERVICE OR ABANDONED. THE ENGINEER/SURVEYOR FURTHER DOES NOT WARRANT THAT THE UNDERGROUND UTILITIES SHOWN ARE IN THE EXACT LOCATION INDICATED.

3. CONTRACTOR IS RESPONSIBLE FOR OBTAINING NHDOT EXCAVATION PERMIT.

4. THIS SET OF PLANS HAS BEEN CREATED TO BE USED IN CONJUNCTION WITH A TECHNICAL SPECIFICATION ENTITLED "WATER TRANSMISSION MAIN IMPROVEMENTS".

5. SEE SECTION 01000 OF THE PROJECT MANUAL FOR PROJECT SPECIFIC REQUIREMENTS CONCERNING PROSECUTION OF WORK.

6. THE CONTRACTOR SHALL BE RESPONSIBLE FOR THE REMOVAL AND DISPOSAL OF ALL SURPLUS MATERIALS, INCLUDING BUT NOT LIMITED TO PIPE, STRUCTURES AND EARTHEN MATERIALS, UNLESS MATERIALS ARE CLAIMED BY THE OWNER.

7. THE CONTRACTOR SHALL BE RESPONSIBLE FOR ALL PROPERTY RESTORATION BOTH PUBLIC AND PRIVATE. UTILITIES DAMAGED AS A RESULT OF THE CONTRACTOR'S OPERATIONS SHALL BE REPAIRED BY THE CONTRACTOR AT NO ADDITIONAL COST TO THE OWNER.

8. TEMPORARY AND OR PERMANENT PAVING REPAIRS SHOULD MAINTAIN EXISTING LINE AND GRADE EXCEPT WHERE NOTED ON DRAWINGS. SEE PAVEMENT REPAIR DETAILS.

9. PAVEMENT REPAIRS TO DRIVEWAYS OR OTHER AREAS OUTSIDE DEFINED PAYMENT LIMITS, AS DEFINED ON THE DRAWINGS IS SUBSIDIARY AND WILL NOT BE MEASURED FOR PAYMENT.

10. NOT ALL OVERHEAD WIRE DROPS TO BUILDINGS ARE SHOWN. THE CONTRACTOR SHALL ANTICIPATE THEIR EXISTENCE IN ALL OPERATIONS.

11. ALL EXISTING WATER BOXES, SEWER AND CATCH BASIN FRAMES AND GRATES AND OTHER CASTINGS DISTURBED OR RELOCATED BY CONSTRUCTION SHALL BE ADJUSTED TO LINE AND GRADE (SUBSIDIARY).

12. CONSTRUCTION SEQUENCE (GENERAL): PERFORM WORK IN GENERAL IN THIS SEQUENCE:

    A. PRIOR TO START OF CONSTRUCTION, PROVIDE A WRITTEN NARRATIVE OF CONSTRUCTION METHODS TO BE USED AND A PRELIMINARY SCHEDULE OF KEY MILESTONES.

    B. PREPARE AND SUBMIT A TEMPORARY WATER SYSTEM BY-PASS PLAN FOR REVIEW (SECTION 01515 OF THE PROJECT MANUAL).

    C. PREPARE AND SUBMIT A TRAFFIC CONTROL PLAN FOR REVIEW.

    D. PERFORM WORK IN ACCORDANCE WITH APPROVED SCHEDULE AND CONSTRUCTION NARRATIVE UNLESS OTHERWISE APPROVED OR DIRECTED.

    E. MAINTENANCE OF PAVED AREAS AND PROPERTY RESTORATION.

        1. MAINTAIN TRENCHES SMOOTH AND FREE OF RUTTING THROUGHOUT CONSTRUCTION TO ACCOMMODATE TRAFFIC.

        2. INSTALL TEMPORARY PAVEMENT ONLY WHERE DIRECTED.

        3. COMPLETE PERMANENT PAVEMENT RESTORATIONS (BINDER), SIDEWALK AND DRIVEWAY RESTORATIONS FOLLOWING INSTALLATION AND TESTING OF WATER MAIN AT EACH LOCATION. NO MORE THAN 1,000 FEET OF PAVEMENT SHALL BE DISTURBED AT ANY GIVEN TIME.

        4. COMPLETE FINISH GRADING, SEEDING MULCHING AND PROPERTY RESTORATION IMMEDIATELY FOLLOWING PAVEMENT REPAIRS.

WATER DISTRIBUTION SYSTEM NOTES:

1. THE CONTRACTOR SHALL BE RESPONSIBLE FOR THE CONTINUOUS MAINTENANCE OF POTABLE AND FIRE WATER SYSTEM DURING CONSTRUCTION. THE INTENT IS TO INSTALL THE NEW WATER LINE IN THE SAME TRENCH AS THE EXISTING MAIN. THE WORK INCLUDES INSTALLATION OF A TEMPORARY WATER SYSTEM, MAINTENANCE OF WATER SERVICE TO BUILDINGS AND HYDRANTS AND REMOVAL OF THE OLD PIPE WHILE INSTALLING THE NEW WATER MAIN AND SERVICE LINES. CONTRACTOR SHALL BE RESPONSIBLE FOR DISPOSAL OF EXISTING MAINS THAT ARE REMOVED.

2. CONTRACTOR SHALL NOTE THAT WORK FOR ADD. ALT. NO. 1 IS WITHIN THE CITY OF PORTSMOUTH DRINKING WATER SYSTEM. THE CONTRACTOR SHALL FOLLOW ALL CITY STANDARDS & SHALL COORDINATE WITH THE CITY OF PORTSMOUTH DEPARTMENT OF PUBLIC WORKS FOR ALL TEMPORARY WATER INTERRUPTIONS & CHANGES TO WATER SYSTEM OPERATIONS.

3. SEE DWG. NOS C18 & C19 FOR INSTALLATION DETAILS.

4. THE CONTRACTOR SHALL AVOID INTERRUPTIONS TO WATER SERVICE TO THE EXTENT WHICH IS POSSIBLE. TEMPORARY INTERRUPTIONS IN WATER SERVICE TO HOMEOWNERS AND BUSINESS OWNERS SHALL BE SCHEDULED ONE WEEK (5 BUSINESS DAY) IN ADVANCE, WITH TOWN OF NEW CASTLE. HOMEOWNERS AND BUSINESS OWNERS SHALL BE GIVEN 2 BUSINESS DAYS (48 HOURS) VERBAL AND WRITTEN NOTICE OF ANY SCHEDULE SERVICE INTERRUPTIONS.

5. THE CONTRACTOR SHALL ANTICIPATE THAT TEMPORARY WATER WILL BE PROVIDED AT EACH WORK ZONE TO FACILITATE CONSTRUCTION OF NEW WATER MAIN (ITEM 1.7). A TEMPORARY UTILITY PLAN SHALL BE SUBMITTED FOR EACH WORK ZONE FOR REVIEW & APPROVAL BY TOWN & ENGINEER.

6. SEE SECTION 01000, PROSECUTION OF WORK FOR PROJECT SPECIFIC REQUIREMENTS.

7. MINIMUM DEPTH OF COVER SHALL BE 5' UNLESS SHOWN OTHERWISE ON THE DRAWINGS. ABRUPT CHANGES IN GRADE SHALL BE AVOIDED.

8. EXISTING HYDRANT ASSEMBLIES SHALL BE REMOVED FROM SERVICE AND DISPOSED OF BY THE CONTRACTOR WHERE SHOWN ON THE DRAWINGS.

9. NEW MAINS SHALL BE CLASS 52 DOUBLE CEMENT LINE DUCTILE IRON EXCEPT WHERE INDICATED OTHERWISE. ALL JOINTS FOR DUCTILE IRON PIPE SHALL BE PUSH-ON JOINTS UNLESS SHOWN OTHERWISE ON THE DRAWINGS. ALL FITTINGS SHALL BE DUCTILE IRON MECHANICAL JOINT CLASS 350. HYDRANT BRANCHES SHALL BE DUCTILE IRON CLASS 52 ANCHOR TEES AND WITH RESTRAINED JOINTS.

10. ALL WATER SERVICES SHALL MATCH THE EXISTING SERVICE SIZE OR PROVIDE 1" COPPER (MINIMUM), WHICHEVER IS LARGER, THE CONTRACTOR SHOULD NOTE THAT THE MAJORITY OF EXISTING SERVICES ARE 3/4" DIA. AND A 1"x 3/4" REDUCER COUPLING WILL BE REQUIRED TO COMPLETE THE CONNECTION, SUBSIDIARY TO ITEM ___.

11. EXISTING WATER SERVICES SHALL BE TIED INTO NEW MAIN WITH A NEW CORPORATION STOP UNLESS SHOWN OTHERWISE. PAYMENT SHALL BE UNDER ITEM 1.3.X.
    - IF ADDITIONAL SERVICE LENGTH IS NEEDED, CONTRACTOR SHALL INSTALL A NEW LENGTH OF SERVICE PIPE WITH A COUPLING TO CONNECT TO EXISTING SERVICE PIPE, PAYMENT SHALL BE UNDER ITEM 1.2.X.
    - ANY NON-COPPER SERVICES ENCOUNTERED (BLACK IRON, LEAD, ETC.) SHALL BE REPLACED TO THE RIGHT OF WAY LIMIT WITH NEW COPPER SERVICE PER DETAIL ON DWG C19. PAYMENT SHALL BE UNDER ITEM 1.2.X.

12. ALL GATE VALVES SHALL HAVE RESTRAINED MECHANICAL JOINTS AND OPEN LEFT. (CONTERCLOCKWISE). NEW VALVES SHALL BE PLACED OUTSIDE OF WHEEL PATHS.

13. ALL TEES, BENDS, GATE VALVES, CAPS, AND HDPE TO DI TRANSITIONS SHALL BE CONSTRUCTED USING MECHANICAL RESTRAINT JOINTS, FULLY DEVELOPED THRUST RESTRAINED LENGTH, AND THRUST BLOCKS, SUBSIDIARY TO WATER WORK. SEE WATER DETAIL SHEET C18.

14. MAINTAIN A MINIMUM 10 FEET HORIZONTAL DISTANCE BETWEEN WATER MAIN AND SEWER PIPING. NOTIFY ENGINEER OF ANY DISCREPANCY.

15. TEST PRESSURE FOR THE COMBINED PRESSURE AND LEAKAGE TEST SHALL BE 150 PSI OR 150% OF NORMAL OPERATING PRESSURE WHICHEVER IS GREATER. TEST SHALL BE PERFORMED IN ACCORDANCE WITH AWWA C-600.

16. TRENCHES SHALL NOT BE LEFT OPEN DURING NON-WORKING HOURS. ALL OPEN PIPES SHALL BE SECURED WITH A WATERTIGHT PLUG AND BACKFILLED WHEN PIPE LAYING IS NOT IN PROCESS.

17. THE NEW WATER MAIN SHALL CROSS ABOVE THE SANITARY SEWER AT CROSSINGS. A FULL LENGTH OF WATER MAIN SHALL BE CENTERED AT THE CROSSING. MAINTAIN A MINIMUM CLEAR SEPARATION DISTANCE OF 18 INCHES WHEREVER POSSIBLE.

18. MAIN LINE GATE VALVES MAY BE PLACED EITHER SIDE OF HYDRANT ASSEMBLIES BASED ON CONSTRUCTION SEQUENCE, TEMPORARY WATER SYSTEM CONNECTIONS OR TO ALLOW ADEQUATE AND THOROUGH MAIN FLUSHING PRIOR TO TESTING.

19. NO VALVES, VALVE BOXES, FITTINGS, PIPE, ETC. SHALL BE RE-USED IN THE WORK. ALL ITEMS MEASURED FOR PAYMENT SHALL BE NEW, UNLESS SPECIFICALLY NOTED.

20. NOT ALL REQUIRED FITTINGS SUCH AS BENDS AND COUPLINGS ARE SHOWN ON THE DRAWINGS. SOME OF THE FITTINGS SHOWN MAY BE ELIMINATED DEPENDING ON THE FINAL LAYOUT. THE LOCATION, AND SIZE OF FITTINGS SHALL BE DETERMINED IN THE FIELD.

21. THE EXISTING SYSTEM VALVES SHALL BE OPERATED ONLY BY TOWN PERSONNEL. THE CONTRACTOR SHALL NOTIFY THE OWNER IF VALVE OPERATION IS REQUIRED.

22. EXISTING SEWERS ARE ASBESTOS PIPE CEMENT. CONTRACTOR SHALL EXERCISE CARE WHEN WORKING AROUND AC SEWERS. INACTIVE AC PIPE, IF ENCOUNTERED, SHALL BE ABANDONED IN PLACE UNLESS DIRECTED OTHERWISE.

23. THE WATER SYSTEM SHALL BE CONSTRUCTED WITH IRON AND STEEL PRODUCTS THAT ARE PRODUCED IN NORTH AMERICA.

SURVEY NOTES:

1. REFERENCE: WATERLINE PROJECT PART A

2. FIELD SURVEY PERFORMED BY J.M.L., J.C.M. & R.J.O. DURING JULY 2018 USING A TRIMBLE S6 TOTAL STATION WITH A TRIMBLE TSC3 DATA COLLECTOR AND A SOKKIA B21 AUTO LEVEL. TRAVERSE ADJUSTMENT BASED ON LEAST SQUARE ANALYSIS.

3. FIELD SURVEY PERFORMED BY M.J.C. DURING JULY 2018 USING A LEICA HDS SCANNER. REGISTRATION ADJUSTMENT BASED ON LEAST SQUARE ANALYSIS.

4. HORIZONTAL DATUM BASED ON NEW HAMPSHIRE STATE PLANE(2800) NAD83(2011) DERIVED FROM REDUNDANT GPS OBSERVATIONS UTILIZING THE KEYNET GPS VRS NETWORK.

5. VERTICAL DATUM IS BASED ON APPROXIMATE NAVD88(GEOID12A) (±.2') DERIVED FROM REDUNDANT GPS OBSERVATIONS UTILIZING THE KEYNET GPS VRS NETWORK.

6. PROPER FIELD PROCEDURES WERE FOLLOWED IN ORDER TO GENERATE CONTOURS AT 2' INTERVALS. ANY MODIFICATION OF THIS INTERVAL WILL DIMINISH THE INTEGRITY OF THE DATA, AND DOUCET SURVEY, INC. WILL NOT BE RESPONSIBLE FOR ANY SUCH ALTERATION PERFORMED BY THE USER.

7. JURISDICTIONAL WETLANDS AND THE HIGHEST OBSERVABLE TIDE LINE WITHIN THE AREA-OF-INTEREST WERE DELINEATED IN JULY 2018 BY MARC JACOBS, CERTIFIED WETLAND SCIENTIST NUMBER 090, AND JON BALANOFF, ACCORDING TO THE STANDARDS OF THE US ARMY CORPS OF ENGINEERS – WETLANDS DELINEATION MANUAL; THE 2012 REGIONAL SUPPLEMENT TO THE CORPS OF ENGINEERS WETLAND DELINEATION MANUAL: NORTHCENTRAL AND NORTHEAST REGION; THE CODE OF ADMINISTRATIVE RULES, NH DEPARTMENT OF ENVIRONMENTAL SERVICES – WETLANDS BUREAU – ENV WT 100-900 AND THE NEW CASTLE ZONING ORDINANCE – §9.2 WETLANDS CONSERVATION DISTRICT. SOILS WERE EVALUATED UTILIZING THE FIELD INDICATORS FOR IDENTIFYING HYDRIC SOILS IN NEW ENGLAND, VERSION 4, MAY 2017 AND THE FIELD INDICATORS OF HYDRIC SOILS IN THE UNITED STATES, VERSION 8, 2016. THE INDICATOR STATUS OF VEGETATION AS HYDROPHYTIC WAS DETERMINED ACCORDING TO THE U.S. ARMY CORPS OF ENGINEERS – NORTHCENTRAL AND NORTHEAST 2016 REGIONAL WETLAND PLANT LIST. COPIES OF SITE PLANS WHICH HAVE BEEN REVIEWED BY THE WETLAND SCIENTIST ARE INDIVIDUALLY STAMPED, SIGNED AND DATED. THIS NOTE HAS BEEN CUSTOMIZED FOR THIS PROJECT. THERE IS A DELINEATION REPORT THAT ACCOMPANIES THIS PLAN.

8. UNDERGROUND UTILITIES SHOWN HEREON ARE BASED ON OBSERVABLE PHYSICAL EVIDENCE AND PAINT MARKS FOUND ON-SITE.

9. THE ACCURACY OF MEASURED UTILITY INVERTS AND PIPE SIZES/TYPES IS SUBJECT TO NUMEROUS FIELD CONDITIONS, INCLUDING; THE ABILITY TO MAKE VISUAL OBSERVATIONS, DIRECT ACCESS TO THE VARIOUS ELEMENTS, MANHOLE CONFIGURATION, ETC.

10. ALL ELECTRIC, GAS, TEL. WATER, SEWER AND DRAIN SERVICES ARE SHOWN IN SCHEMATIC FASHION, THEIR LOCATIONS ARE NOT PRECISE OR NECESSARILY ACCURATE. NO WORK WHATSOEVER SHALL BE UNDERTAKEN ON THIS SITE USING THIS PLAN TO LOCATE THE ABOVE SERVICES. CONSULT WITH THE PROPER AUTHORITIES CONCERNED WITH THE SUBJECT SERVICE LOCATIONS FOR INFORMATION REGARDING SUCH. CALL DIG-SAFE AT 1-888-DIG-SAFE.

11. CEMETERY SUBJECT TO N.H.R.S.A. 289:3, III NEW CONSTRUCTION, EXCAVATION, OR BUILDING IN THE AREA OF A KNOWN BURIAL SITE SHALL COMPLY WITH LOCAL ZONING. IN ABSENCE OF SUCH REGULATIONS NO NEW CONSTRUCTION, EXCAVATION, OR BUILDING SHALL BE CONDUCTED WITHIN 25' OF THE BOUNDARY OF THE BURIAL GROUND.

12. LIDAR DATA SHOWN IN DRAWING IS A COMPILATION OF 2013-2014 USGS CMGP LIDAR: POST SANDY (MA, NH, RI) & 2014 USACE NAE TOPOBATHY LIDAR: NEW HAMPSHIRE. THIS DATA WAS DOWNLOADED FROM NOAA'S WEBSITE.

13. APPROXIMATE LOCATION OF WATER SERVICE SHUT OFF VALVES THAT COULD NOT BE LOCATED BY PHYSICAL SURVEY ARE SHOWN AS LOCATED BY THE THE CITY OF PORTSMOUTH GIS DATA. THE CONTRACTOR IS RESPONSIBLE FOR FIELD LOCATING ALL SERVICE CONNECTIONS. TOWN OF NEW CASTLE TIE CARDS ARE PROVIDED IN THE CONTRACT DOCUMENTS. NOT ALL SERVICE CONNECTIONS ARE SHOWN. THE CONTRACTOR SHALL ANTICIPATE THEIR EXISTENCE IN ALL OPERATIONS.

REFERENCE PLANS:

1. "TOWN OF NEW CASTLE, SEWAGE WORKS IMPROVEMENTS, SEWERS, PUMPING STATIONS AND FORCE MAINS" BY CAMP DRESSER & MCKEE INC, REVISED JULY 77.

2. AS-BUILT PLANS, "STATE OF NEW HAMPSHIRE DEPARTMENT OF TRANSPORTATION CONSTRUCTION PLANS, BETTERMENT PROJECT, NH PROJECT NO 15895, NH ROUTE 1B", DATED JULY 09, 2012.

3. "CITY OF PORTSMOUTH, NH DEPARTMENT OF PUBLIC WORKS, PEIRCE ISLAND WWTF UPGRADE" BY AECOM TECHNICAL SERVICE, INC. CHELMSFORD, MA, REVISED FOR AS-BUILT MAIN & FORCE MAIN 9-20-18.

NO.	REVISIONS	APP'D

ISSUE FOR
APPROVAL Date 4/9/2019 By RHR
CONSTRUCTION Date – By –
RECORD DWG Date – By –

Drawn/Chk RMG
Designed RHR
Checked –
Approved –
Date 3/25/2019
Book No.
Project No. 2331
Dwg. ID 2331_general
Scale AS SHOWN

FOR APPROVAL
NOT FOR CONSTRUCTION

UNDERWOOD engineers
25 Vaughan Mall, Portsmouth, N.H. 03801
Tel. 603-436-6192 Fax. 603-431-4733

GENERAL NOTES

WATER TRANSMISSION MAIN IMPROVEMENTS PROJECT

TOWN OF NEW CASTLE
NEW CASTLE, NEW HAMPSHIRE

DWG NO G3

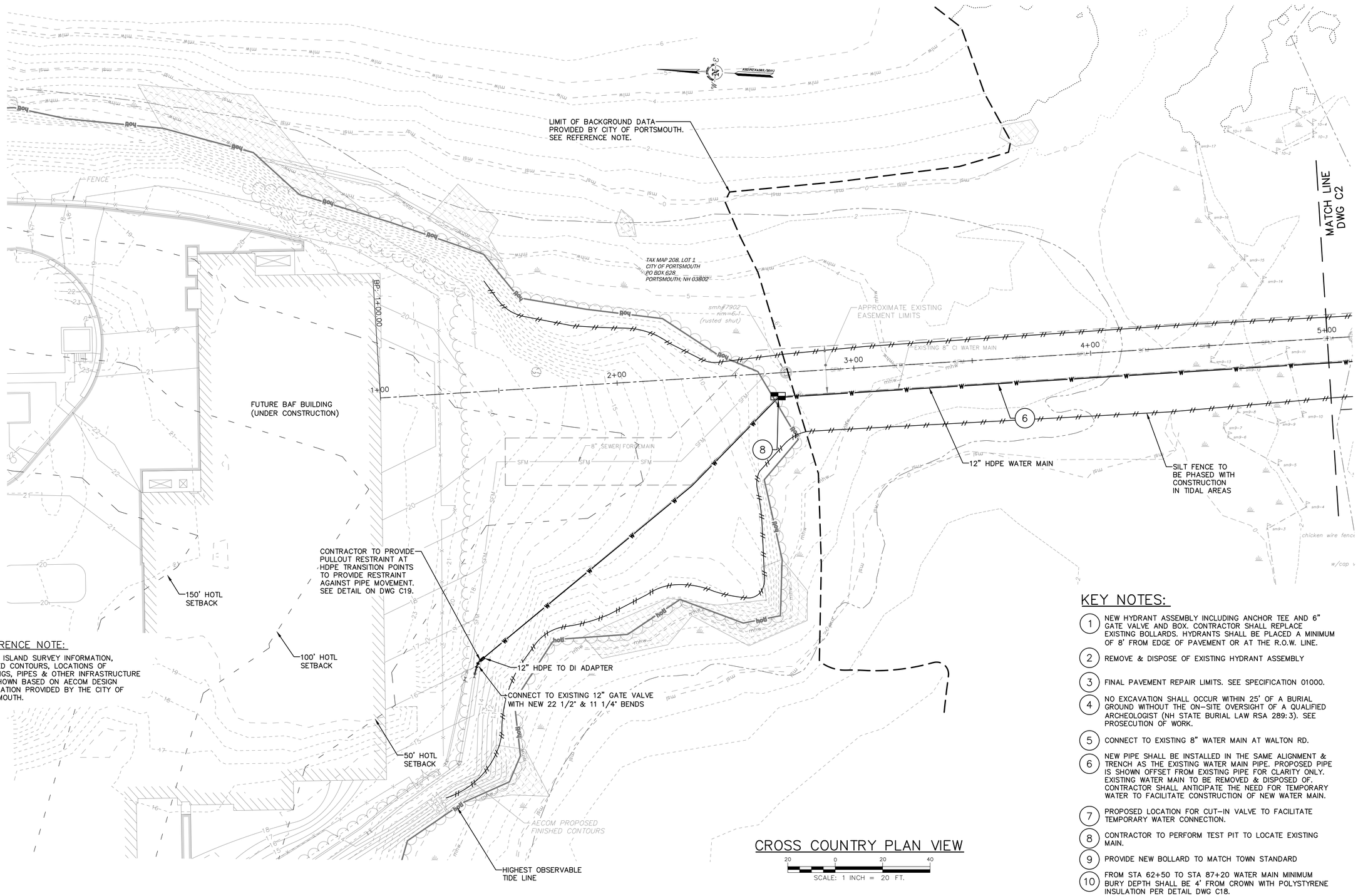

REFERENCE NOTE:

PIERCE ISLAND SURVEY INFORMATION, FINISHED CONTOURS, LOCATIONS OF BUILDINGS, PIPES & OTHER INFRASTRUCTURE ARE SHOWN BASED ON AECOM DESIGN INFORMATION PROVIDED BY THE CITY OF PORTSMOUTH.

CROSS COUNTRY PLAN VIEW

20 0 20 40

SCALE: 1 INCH = 20 FT.

KEY NOTES:

1. NEW HYDRANT ASSEMBLY INCLUDING ANCHOR TEE AND 6" GATE VALVE AND BOX. CONTRACTOR SHALL REPLACE EXISTING BOLLARDS. HYDRANTS SHALL BE PLACED A MINIMUM OF 8' FROM EDGE OF PAVEMENT OR AT THE R.O.W. LINE.
2. REMOVE & DISPOSE OF EXISTING HYDRANT ASSEMBLY
3. FINAL PAVEMENT REPAIR LIMITS. SEE SPECIFICATION 01000.
4. NO EXCAVATION SHALL OCCUR WITHIN 25' OF A BURIAL GROUND WITHOUT THE ON-SITE OVERSIGHT OF A QUALIFIED ARCHEOLOGIST (NH STATE BURIAL LAW RSA 289:3). SEE PROSECUTION OF WORK.
5. CONNECT TO EXISTING 8" WATER MAIN AT WALTON RD.
6. NEW PIPE SHALL BE INSTALLED IN THE SAME ALIGNMENT & TRENCH AS THE EXISTING WATER MAIN PIPE. PROPOSED PIPE IS SHOWN OFFSET FROM EXISTING PIPE FOR CLARITY ONLY. EXISTING WATER MAIN TO BE REMOVED & DISPOSED OF. CONTRACTOR SHALL ANTICIPATE THE NEED FOR TEMPORARY WATER TO FACILITATE CONSTRUCTION OF NEW WATER MAIN.
7. PROPOSED LOCATION FOR CUT-IN VALVE TO FACILITATE TEMPORARY WATER CONNECTION.
8. CONTRACTOR TO PERFORM TEST PIT TO LOCATE EXISTING MAIN.
9. PROVIDE NEW BOLLARD TO MATCH TOWN STANDARD
10. FROM STA 62+50 TO STA 87+20 WATER MAIN MINIMUM BURY DEPTH SHALL BE 4' FROM CROWN WITH POLYSTYRENE INSULATION PER DETAIL DWG C18.
11. WATER MAIN TO CROSS BENEATH EXISTING DRAIN PIPE – MAINTAIN 12" CLEARANCE OR 6" CLEARANCE WITH INSULATION. SEE DETAIL DWG C18. DEFLECT WATER MAIN OR INSTALL BENDS AS REQUIRED.

ISSUE FOR	By	APP'D
APPROVAL Date 4/9/2019	RHR	
CONSTRUCTION Date –	–	
RECORD DWG Date –	–	

NO.	REVISIONS

Drawn/Chk RMG
Designed RHR
Checked –
Approved –
Date 3/25/2019
Book No.
Project No. 2331
Dwg. ID 2331_pbase
Scale AS SHOWN

FOR APPROVAL
NOT FOR CONSTRUCTION

UNDERWOOD engineers
25 Vaughan Mall, Portsmouth, N.H. 03801
Tel. 603-436-6192 Fax. 603-431-4733

PIERCE ISLAND PLAN

WATER TRANSMISSION MAIN IMPROVEMENTS PROJECT
TOWN OF NEW CASTLE
NEW CASTLE, NEW HAMPSHIRE

DWG NO C1

KEY NOTES:

1. NEW HYDRANT ASSEMBLY INCLUDING ANCHOR TEE AND 6" GATE VALVE AND BOX. CONTRACTOR SHALL REPLACE EXISTING BOLLARDS. HYDRANTS SHALL BE PLACED A MINIMUM OF 8' FROM EDGE OF PAVEMENT OR AT THE R.O.W. LINE.
2. REMOVE & DISPOSE OF EXISTING HYDRANT ASSEMBLY
3. FINAL PAVEMENT REPAIR LIMITS. SEE SPECIFICATION 01000.
4. NO EXCAVATION SHALL OCCUR WITHIN 25' OF A BURIAL GROUND WITHOUT THE ON-SITE OVERSIGHT OF A QUALIFIED ARCHEOLOGIST (NH STATE BURIAL LAW RSA 289:3). SEE PROSECUTION OF WORK.
5. CONNECT TO EXISTING 8" WATER MAIN AT WALTON RD.
6. NEW PIPE SHALL BE INSTALLED IN THE SAME ALIGNMENT & TRENCH AS THE EXISTING WATER MAIN PIPE. PROPOSED PIPE IS SHOWN OFFSET FROM EXISTING PIPE FOR CLARITY ONLY. EXISTING WATER MAIN TO BE REMOVED & DISPOSED OF. CONTRACTOR SHALL ANTICIPATE THE NEED FOR TEMPORARY WATER TO FACILITATE CONSTRUCTION OF NEW WATER MAIN.
7. PROPOSED LOCATION FOR CUT-IN VALVE TO FACILITATE TEMPORARY WATER CONNECTION.
8. CONTRACTOR TO PERFORM TEST PIT TO LOCATE EXISTING MAIN.
9. PROVIDE NEW BOLLARD TO MATCH TOWN STANDARD
10. FROM STA 62+50 TO STA 87+20 WATER MAIN MINIMUM BURY DEPTH SHALL BE 4' FROM CROWN WITH POLYSTYRENE INSULATION PER DETAIL DWG C18.
11. WATER MAIN TO CROSS BENEATH EXISTING DRAIN PIPE – MAINTAIN 12" CLEARANCE OR 6" CLEARANCE WITH INSULATION. SEE DETAIL DWG C18. DEFLECT WATER MAIN OR INSTALL BENDS AS REQUIRED.

REFERENCE NOTE:

LOCATIONS OF SEWER AND WATER MAINS ON SHAPLEIGH ISLAND ARE SHOWN BASED ON TIES, STATIONING, & BEND LOCATIONS AS NOTED ON RECORD DRAWINGS FOR SEWAGE WORKS IMPROVEMENTS, CAMP DRESSER & MCKEE INC., REVISED 7/77.

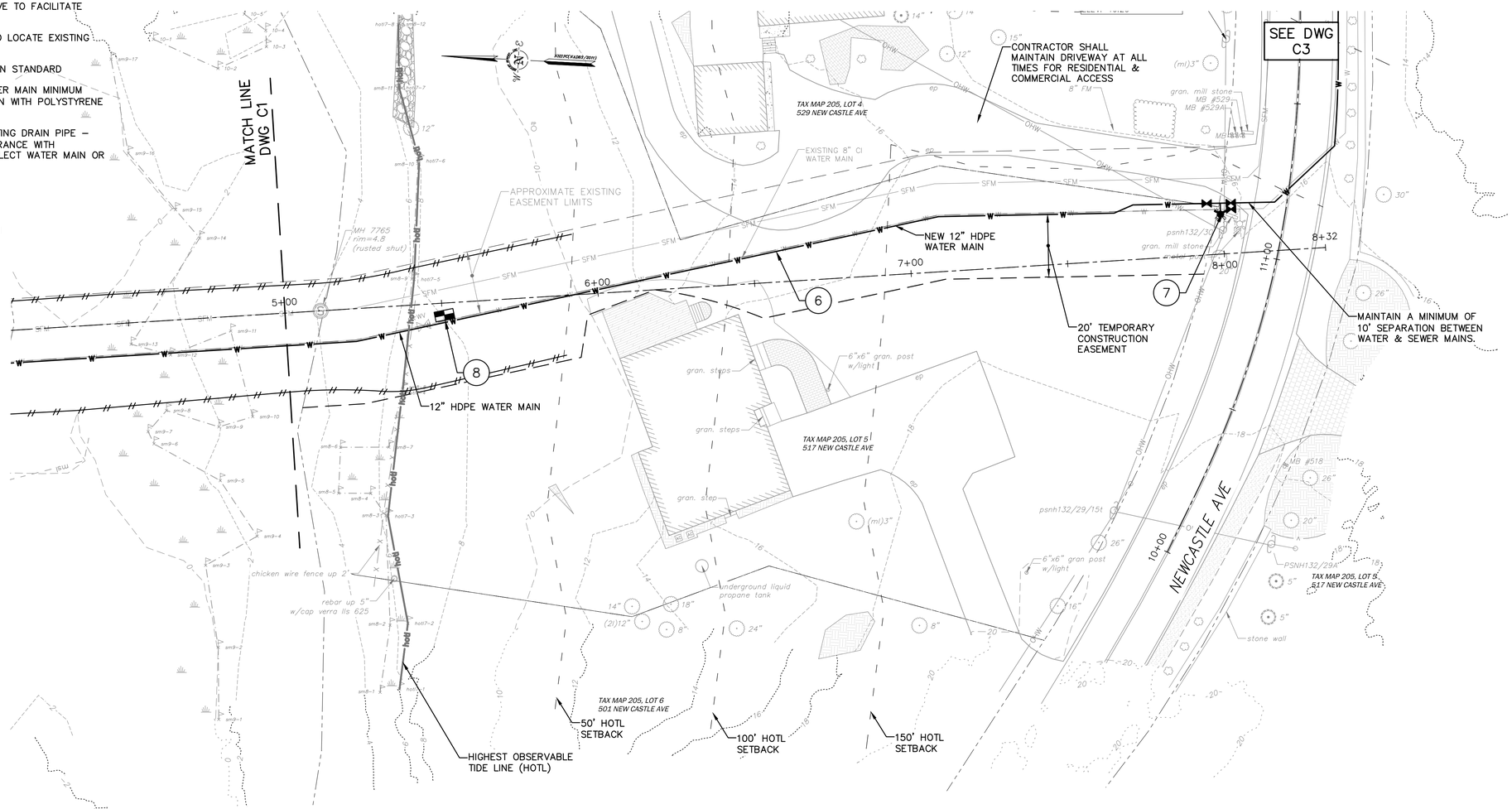

CROSS COUNTRY PLAN VIEW

20 0 20 40

SCALE: 1 INCH = 20 FT.

ISSUE FOR		By	APP'D
APPROVAL	Date 4/9/2019	RHR	
CONSTRUCTION	Date –	By –	
RECORD DWG	Date –	By –	

NO.	REVISIONS

Drawn/Chk RMG
Designed RHR
Checked –
Approved –
Date 3/25/2019
Book No. 2331
Project No. 2331
Dwg. ID 2331.gbase
Scale AS SHOWN

FOR APPROVAL
NOT FOR CONSTRUCTION

UNDERWOOD engineers
25 Vaughan Mall, Portsmouth, N.H. 03801
Tel. 603-436-6192 Fax. 603-431-4733

SHAPLEIGH ISLAND PLAN

WATER TRANSMISSION MAIN IMPROVEMENTS PROJECT

TOWN OF NEW CASTLE
NEW CASTLE, NEW HAMPSHIRE

DWG NO C2

REMOVE & DISPOSE OF EXISTING 8" CHECK VALVE. REPLACE WITH NEW 8" SPOOL WITH TAP & BALL VALVE.THIS WORK SHALL BE PERFORMED BEFORE OTHER WATER MAIN WORK. PROVIDE NEW BATTERY POWERED PRESSURE TRANSMITTER WITH NEW SCADA OUTPUT FOR FUTURE CONNECTION TO C.O.P. SCADA. PROVIDE NEW CONDUIT & WATERTIGHT JUNCTION BOX FOR SCADA CONNECTION.

REPLACE OUTPUT MODULE ON EXISTING ELSTER EVOQ4 FLOW METER WITH NEW MX42 VP MODULE. PROVIDE CONNECTION TO EXISTING RADIO ANTENNA & NEW SCADA PULSE OUTPUT FOR FUTURE CONNECTION TO C.O.P. SCADA. PROVIDE NEW CONDUIT FOR SIGNAL WIRES & WATERTIGHT JUNCTION BOX FOR SCADA CONNECTION.

PHOTO 1 – SHAPLEIGH ISLAND VAULT

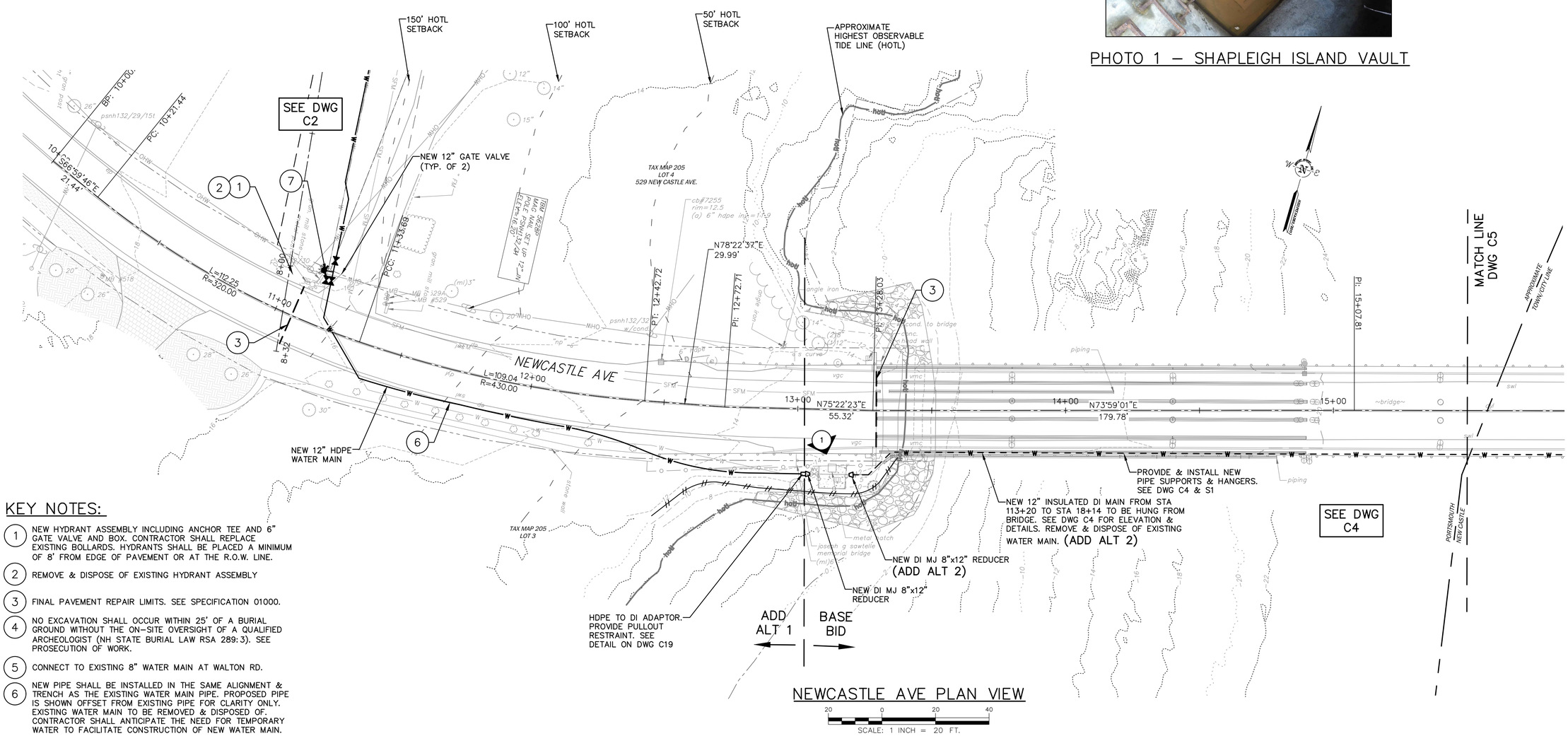

NEWCASTLE AVE PLAN VIEW

SCALE: 1 INCH = 20 FT.

KEY NOTES:

1. NEW HYDRANT ASSEMBLY INCLUDING ANCHOR TEE AND 6" GATE VALVE AND BOX. CONTRACTOR SHALL REPLACE EXISTING BOLLARDS. HYDRANTS SHALL BE PLACED A MINIMUM OF 8' FROM EDGE OF PAVEMENT OR AT THE R.O.W. LINE.
2. REMOVE & DISPOSE OF EXISTING HYDRANT ASSEMBLY
3. FINAL PAVEMENT REPAIR LIMITS. SEE SPECIFICATION 01000.
4. NO EXCAVATION SHALL OCCUR WITHIN 25' OF A BURIAL GROUND WITHOUT THE ON-SITE OVERSIGHT OF A QUALIFIED ARCHEOLOGIST (NH STATE BURIAL LAW RSA 289:3). SEE PROSECUTION OF WORK.
5. CONNECT TO EXISTING 8" WATER MAIN AT WALTON RD.
6. NEW PIPE SHALL BE INSTALLED IN THE SAME ALIGNMENT & TRENCH AS THE EXISTING WATER MAIN PIPE. PROPOSED PIPE IS SHOWN OFFSET FROM EXISTING PIPE FOR CLARITY ONLY. EXISTING WATER MAIN TO BE REMOVED & DISPOSED OF. CONTRACTOR SHALL ANTICIPATE THE NEED FOR TEMPORARY WATER TO FACILITATE CONSTRUCTION OF NEW WATER MAIN.
7. PROPOSED LOCATION FOR CUT-IN VALVE TO FACILITATE TEMPORARY WATER CONNECTION.
8. CONTRACTOR TO PERFORM TEST PIT TO LOCATE EXISTING MAIN.
9. PROVIDE NEW BOLLARD TO MATCH TOWN STANDARD
10. FROM STA 62+50 TO STA 87+20 WATER MAIN MINIMUM BURY DEPTH SHALL BE 4' FROM CROWN WITH POLYSTYRENE INSULATION PER DETAIL DWG C18.
11. WATER MAIN TO CROSS BENEATH EXISTING DRAIN PIPE – MAINTAIN 12" CLEARANCE OR 6" CLEARANCE WITH INSULATION. SEE DETAIL DWG C18. DEFLECT WATER MAIN OR INSTALL BENDS AS REQUIRED.

NO.	REVISIONS	APP'D

ISSUE FOR
APPROVAL Date 4/9/2019 By RHR
CONSTRUCTION Date – By –
RECORD DWG Date – By –

Drawn/Chk RMG
Designed RHR
Checked –
Approved –
Date 3/25/2019
Book No. 2331
Project No. 2331
Dwg. ID 2331_pbase
Scale AS SHOWN

FOR APPROVAL
NOT FOR CONSTRUCTION

UNDERWOOD engineers
25 Vaughan Mall, Portsmouth, N.H. 03801
Tel. 603-436-6192 Fax. 603-431-4733

NEWCASTLE AVE PLAN
STA. 10+00 to STA. 15+50

WATER TRANSMISSION MAIN IMPROVEMENTS PROJECT

TOWN OF NEW CASTLE
NEW CASTLE, NEW HAMPSHIRE

DWG NO C3

H:\Real Numbers\New Castle\2331 New Castle Water Main\design\drawings\2331_PbaseDwg.C3, 4/9/2019 1:10:51 PM, rmg

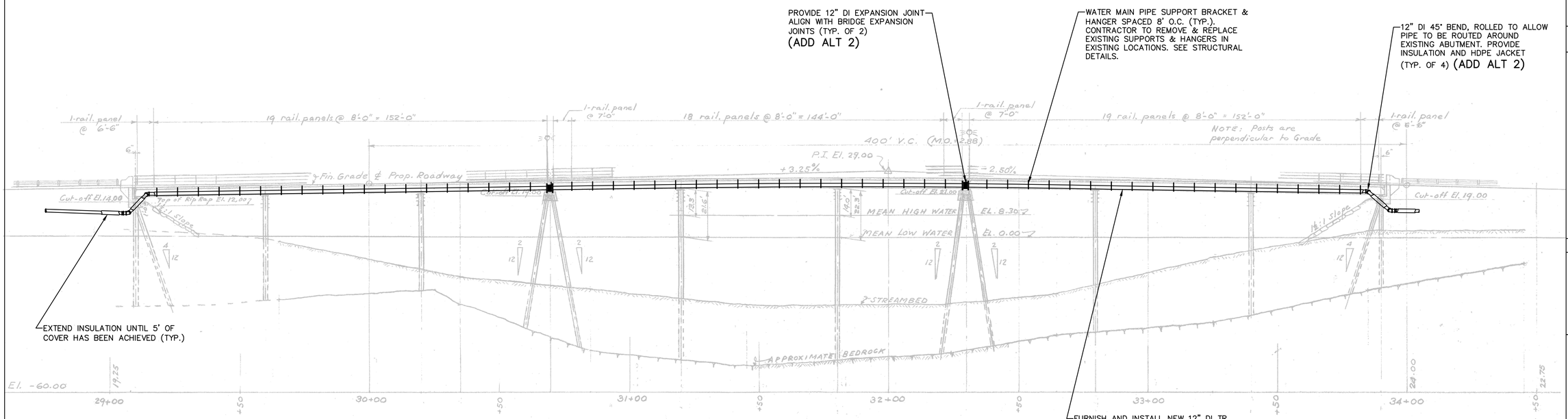

PSCATAQUA ESTUARY BRIDGE PROFILE VIEW

20 0 20 40

SCALE: 1 INCH = 20 FT.

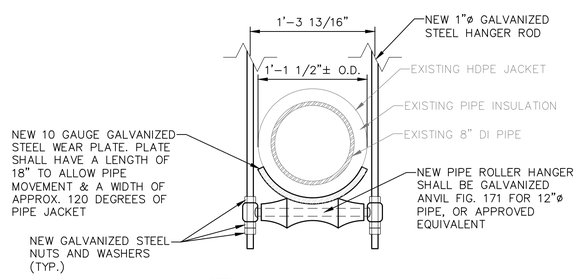

NOTE:
1. REFER TO STRUCTURAL DRAWINGS

TYP. PIPE ROLLER ASSEMBLY
(BASE BID)

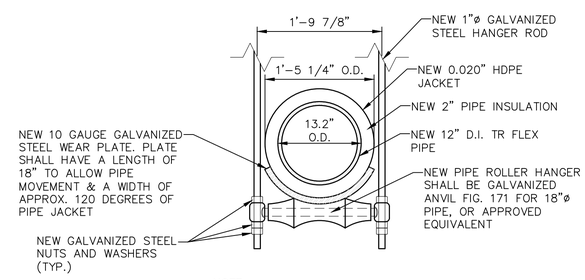

NOTE:
1. REFER TO STRUCTURAL DRAWINGS

TYP. PIPE ROLLER ASSEMBLY
(ADD ALT 2)

ISSUE FOR	By	APP'D
APPROVAL Date 4/9/2019	RHR	
CONSTRUCTION Date –	By –	
RECORD DWG Date –	By –	

NO.	REVISIONS

Drawn/Chk. RMG
Designed RHR
Checked –
Approved –
Date 3/25/2019
Book No.
Project No. 2331
Dwg. ID 2331_pbase
Scale AS SHOWN

FOR APPROVAL
NOT FOR CONSTRUCTION

UNDERWOOD engineers
25 Vaughan Mall, Portsmouth, N.H. 03801
Tel. 603-436-6192 Fax. 603-431-4733

PISCATAQUA ESTUARY BRIDGE
PROFILE VIEW

WATER TRANSMISSION MAIN
IMPROVEMENTS PROJECT

TOWN OF NEW CASTLE
NEW CASTLE, NEW HAMPSHIRE

DWG NO C4

SHEET 8 OF 37

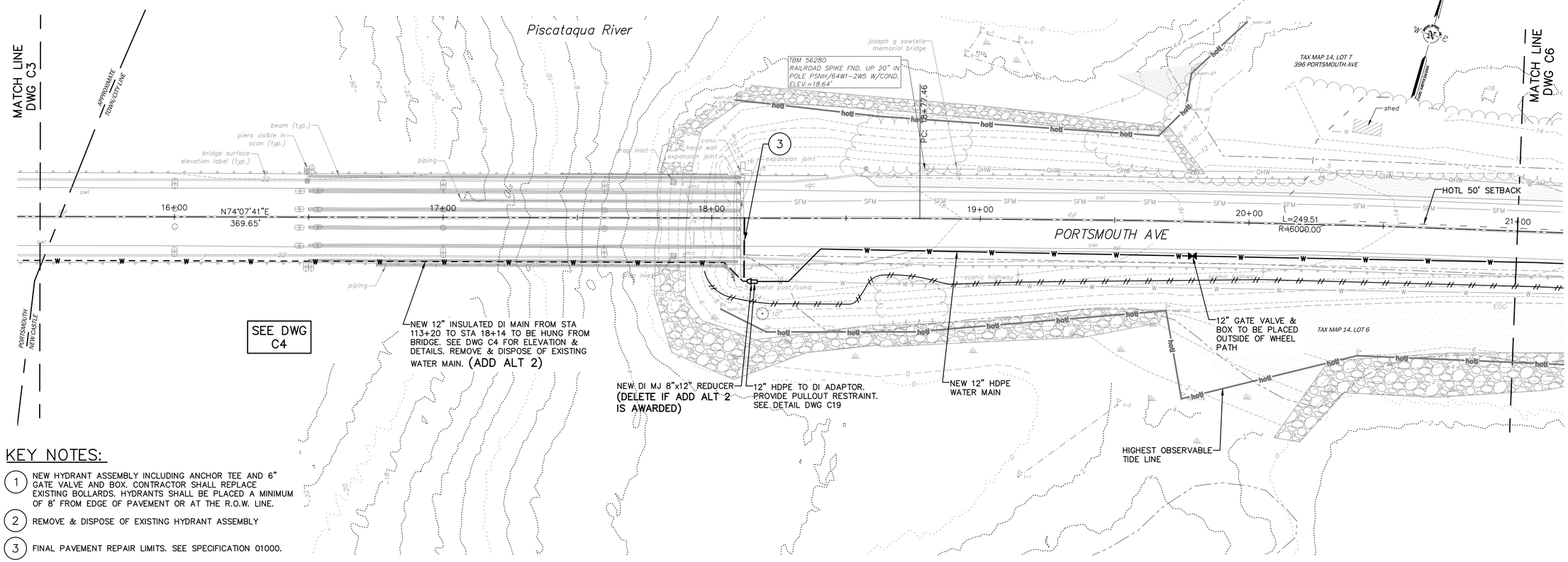

PORTSMOUTH AVE PLAN VIEW

20 0 20 40

SCALE: 1 INCH = 20 FT.

KEY NOTES:

1. NEW HYDRANT ASSEMBLY INCLUDING ANCHOR TEE AND 6" GATE VALVE AND BOX. CONTRACTOR SHALL REPLACE EXISTING BOLLARDS. HYDRANTS SHALL BE PLACED A MINIMUM OF 8' FROM EDGE OF PAVEMENT OR AT THE R.O.W. LINE.
2. REMOVE & DISPOSE OF EXISTING HYDRANT ASSEMBLY
3. FINAL PAVEMENT REPAIR LIMITS. SEE SPECIFICATION 01000.
4. NO EXCAVATION SHALL OCCUR WITHIN 25' OF A BURIAL GROUND WITHOUT THE ON-SITE OVERSIGHT OF A QUALIFIED ARCHEOLOGIST (NH STATE BURIAL LAW RSA 289:3). SEE PROSECUTION OF WORK.
5. CONNECT TO EXISTING 8" WATER MAIN AT WALTON RD.
6. NEW PIPE SHALL BE INSTALLED IN THE SAME ALIGNMENT & TRENCH AS THE EXISTING WATER MAIN PIPE. PROPOSED PIPE IS SHOWN OFFSET FROM EXISTING PIPE FOR CLARITY ONLY. EXISTING WATER MAIN TO BE REMOVED & DISPOSED OF. CONTRACTOR SHALL ANTICIPATE THE NEED FOR TEMPORARY WATER TO FACILITATE CONSTRUCTION OF NEW WATER MAIN.
7. PROPOSED LOCATION FOR CUT-IN VALVE TO FACILITATE TEMPORARY WATER CONNECTION.
8. CONTRACTOR TO PERFORM TEST PIT TO LOCATE EXISTING MAIN.
9. PROVIDE NEW BOLLARD TO MATCH TOWN STANDARD
10. FROM STA 62+50 TO STA 87+20 WATER MAIN MINIMUM BURY DEPTH SHALL BE 4' FROM CROWN WITH POLYSTYRENE INSULATION PER DETAIL DWG C18.
11. WATER MAIN TO CROSS BENEATH EXISTING DRAIN PIPE – MAINTAIN 12" CLEARANCE OR 6" CLEARANCE WITH INSULATION. SEE DETAIL DWG C18. DEFLECT WATER MAIN OR INSTALL BENDS AS REQUIRED.

NO.	REVISIONS	APP'D

ISSUE FOR		By
APPROVAL	Date 4/9/2019	RHR
CONSTRUCTION	Date –	By –
RECORD DWG	Date –	By –

Drawn/Chk. RMG
Designed RHR
Checked –
Approved –
Date 3/25/2019
Book No.
Project No. 2331
Dwg. ID 2331_pbase
Scale AS SHOWN

FOR APPROVAL
NOT FOR CONSTRUCTION

UNDERWOOD engineers
25 Vaughan Mall, Portsmouth, N.H. 03801
Tel. 603-436-6192 Fax. 603-431-4733

PORTSMOUTH AVE PLAN
STA. 15+50 to STA. 21+00

WATER TRANSMISSION MAIN IMPROVEMENTS PROJECT

TOWN OF NEW CASTLE
NEW CASTLE, NEW HAMPSHIRE

DWG NO C5

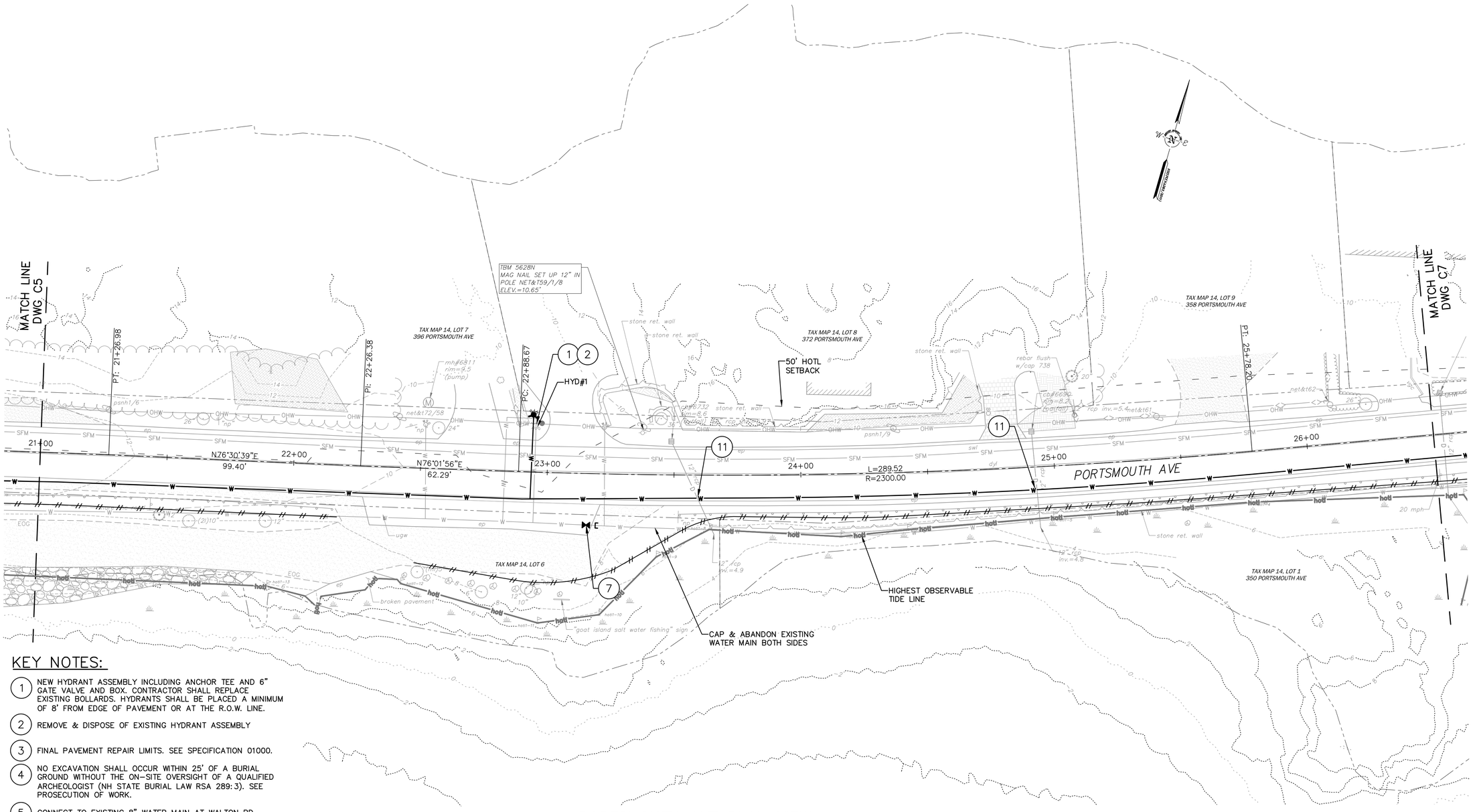

KEY NOTES:

1. NEW HYDRANT ASSEMBLY INCLUDING ANCHOR TEE AND 6" GATE VALVE AND BOX. CONTRACTOR SHALL REPLACE EXISTING BOLLARDS. HYDRANTS SHALL BE PLACED A MINIMUM OF 8' FROM EDGE OF PAVEMENT OR AT THE R.O.W. LINE.
2. REMOVE & DISPOSE OF EXISTING HYDRANT ASSEMBLY
3. FINAL PAVEMENT REPAIR LIMITS. SEE SPECIFICATION 01000.
4. NO EXCAVATION SHALL OCCUR WITHIN 25' OF A BURIAL GROUND WITHOUT THE ON-SITE OVERSIGHT OF A QUALIFIED ARCHEOLOGIST (NH STATE BURIAL LAW RSA 289:3). SEE PROSECUTION OF WORK.
5. CONNECT TO EXISTING 8" WATER MAIN AT WALTON RD.
6. NEW PIPE SHALL BE INSTALLED IN THE SAME ALIGNMENT & TRENCH AS THE EXISTING WATER MAIN PIPE. PROPOSED PIPE IS SHOWN OFFSET FROM EXISTING PIPE FOR CLARITY ONLY. EXISTING WATER MAIN TO BE REMOVED & DISPOSED OF. CONTRACTOR SHALL ANTICIPATE THE NEED FOR TEMPORARY WATER TO FACILITATE CONSTRUCTION OF NEW WATER MAIN.
7. PROPOSED LOCATION FOR CUT-IN VALVE TO FACILITATE TEMPORARY WATER CONNECTION.
8. CONTRACTOR TO PERFORM TEST PIT TO LOCATE EXISTING MAIN.
9. PROVIDE NEW BOLLARD TO MATCH TOWN STANDARD
10. FROM STA 62+50 TO STA 87+20 WATER MAIN MINIMUM BURY DEPTH SHALL BE 4' FROM CROWN WITH POLYSTYRENE INSULATION PER DETAIL DWG C18.
11. WATER MAIN TO CROSS BENEATH EXISTING DRAIN PIPE – MAINTAIN 12" CLEARANCE OR 6" CLEARANCE WITH INSULATION. SEE DETAIL DWG C18. DEFLECT WATER MAIN OR INSTALL BENDS AS REQUIRED.

PORTSMOUTH AVE PLAN VIEW

20 0 20 40

SCALE: 1 INCH = 20 FT.

ISSUE FOR	By
APPROVAL	
Date 4/9/2019	RHR
CONSTRUCTION	
Date –	By –
RECORD DWG	
Date –	By –

NO.	REVISIONS	APP'D

Drawn/Chk. RMG
Designed RHR
Checked –
Approved –
Date 3/25/2019
Book No. 2331
Project No. 2331
Dwg. ID 2331_phase
Scale AS SHOWN

FOR APPROVAL
NOT FOR CONSTRUCTION

UNDERWOOD engineers
25 Vaughan Mall, Portsmouth, N.H. 03801
Tel. 603-436-6192 Fax. 603-431-4733

PORTSMOUTH AVE PLAN
STA. 21+00 to STA. 26+50

WATER TRANSMISSION MAIN
IMPROVEMENTS PROJECT

TOWN OF NEW CASTLE
NEW CASTLE, NEW HAMPSHIRE

DWG NO C6

H:\Real Numbers\New Castle\2331 New Castle Water Main\design drawings\2331_Phase.dwg, C6, 4/8/2019 1:11:23 PM, rmg

KEY NOTES:

1. NEW HYDRANT ASSEMBLY INCLUDING ANCHOR TEE AND 6" GATE VALVE AND BOX. CONTRACTOR SHALL REPLACE EXISTING BOLLARDS. HYDRANTS SHALL BE PLACED A MINIMUM OF 8' FROM EDGE OF PAVEMENT OR AT THE R.O.W. LINE.
2. REMOVE & DISPOSE OF EXISTING HYDRANT ASSEMBLY
3. FINAL PAVEMENT REPAIR LIMITS. SEE SPECIFICATION 01000.
4. NO EXCAVATION SHALL OCCUR WITHIN 25' OF A BURIAL GROUND WITHOUT THE ON-SITE OVERSIGHT OF A QUALIFIED ARCHEOLOGIST (NH STATE BURIAL LAW RSA 289:3). SEE PROSECUTION OF WORK.
5. CONNECT TO EXISTING 8" WATER MAIN AT WALTON RD.
6. NEW PIPE SHALL BE INSTALLED IN THE SAME ALIGNMENT & TRENCH AS THE EXISTING WATER MAIN PIPE. PROPOSED PIPE IS SHOWN OFFSET FROM EXISTING PIPE FOR CLARITY ONLY. EXISTING WATER MAIN TO BE REMOVED & DISPOSED OF. CONTRACTOR SHALL ANTICIPATE THE NEED FOR TEMPORARY WATER TO FACILITATE CONSTRUCTION OF NEW WATER MAIN.
7. PROPOSED LOCATION FOR CUT-IN VALVE TO FACILITATE TEMPORARY WATER CONNECTION.
8. CONTRACTOR TO PERFORM TEST PIT TO LOCATE EXISTING MAIN.
9. PROVIDE NEW BOLLARD TO MATCH TOWN STANDARD
10. FROM STA 62+50 TO STA 87+20 WATER MAIN MINIMUM BURY DEPTH SHALL BE 4' FROM CROWN WITH POLYSTYRENE INSULATION PER DETAIL DWG C18.
11. WATER MAIN TO CROSS BENEATH EXISTING DRAIN PIPE – MAINTAIN 12" CLEARANCE OR 6" CLEARANCE WITH INSULATION. SEE DETAIL DWG C18. DEFLECT WATER MAIN OR INSTALL BENDS AS REQUIRED.

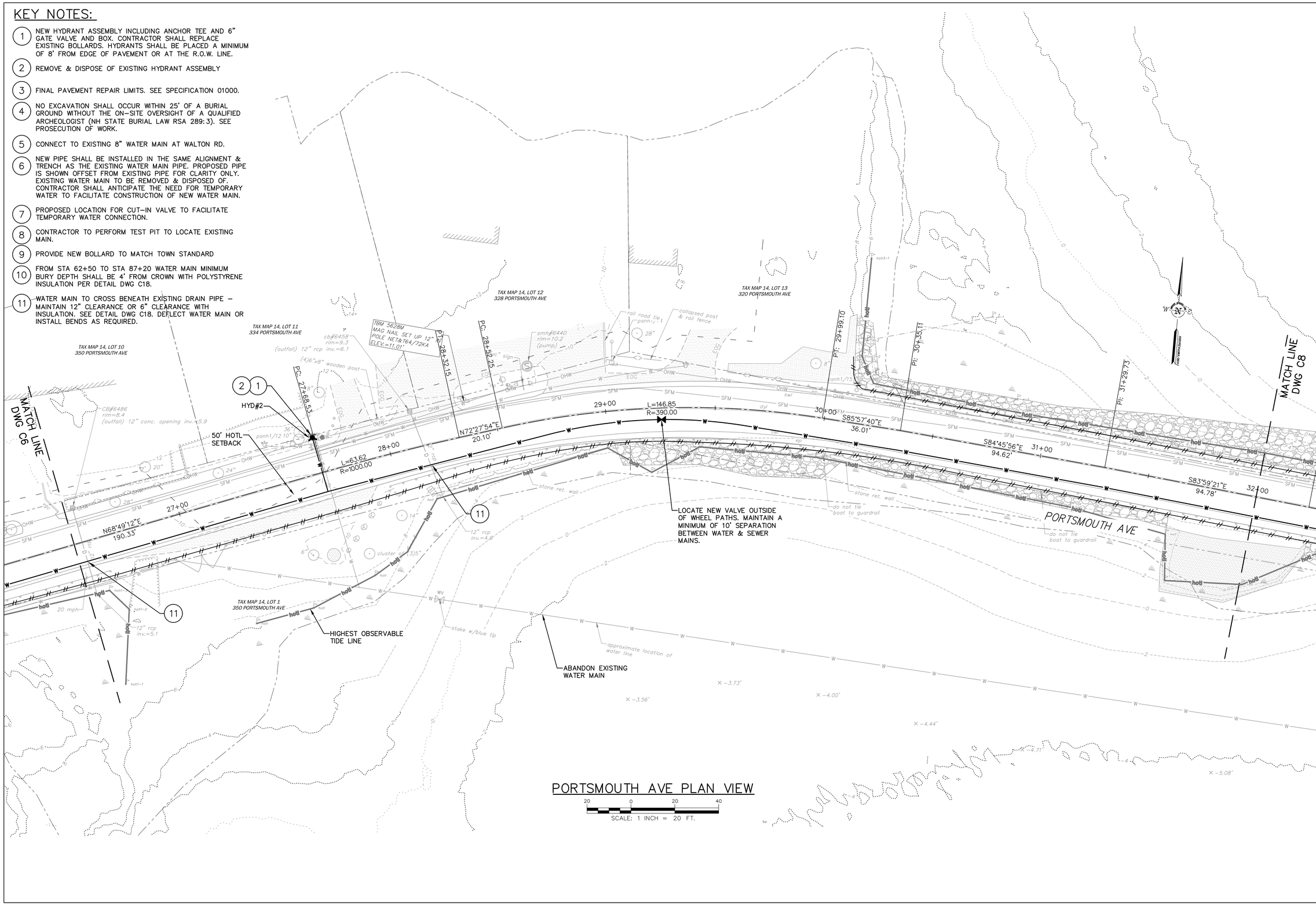

PORTSMOUTH AVE PLAN VIEW

SCALE: 1 INCH = 20 FT.

ISSUE FOR		
APPROVAL	Date 4/9/2019	By RHR
CONSTRUCTION	Date –	By –
RECORD DWG	Date –	By –

NO.	REVISIONS	APP'D

Drawn/Chk RMG
Designed RHR
Checked –
Approved –
Date 3/25/2019
Book No. 2331
Project No. 2331
Dwg. ID 2331_pbase
Scale AS SHOWN

FOR APPROVAL
NOT FOR CONSTRUCTION

UNDERWOOD engineers
25 Vaughan Mall, Portsmouth, N.H. 03801
Tel. 603-436-6192 Fax. 603-431-4733

PORTSMOUTH AVE PLAN
STA. 26+50 to STA. 32+00

WATER TRANSMISSION MAIN IMPROVEMENTS PROJECT

TOWN OF NEW CASTLE
NEW CASTLE, NEW HAMPSHIRE

DWG NO C7

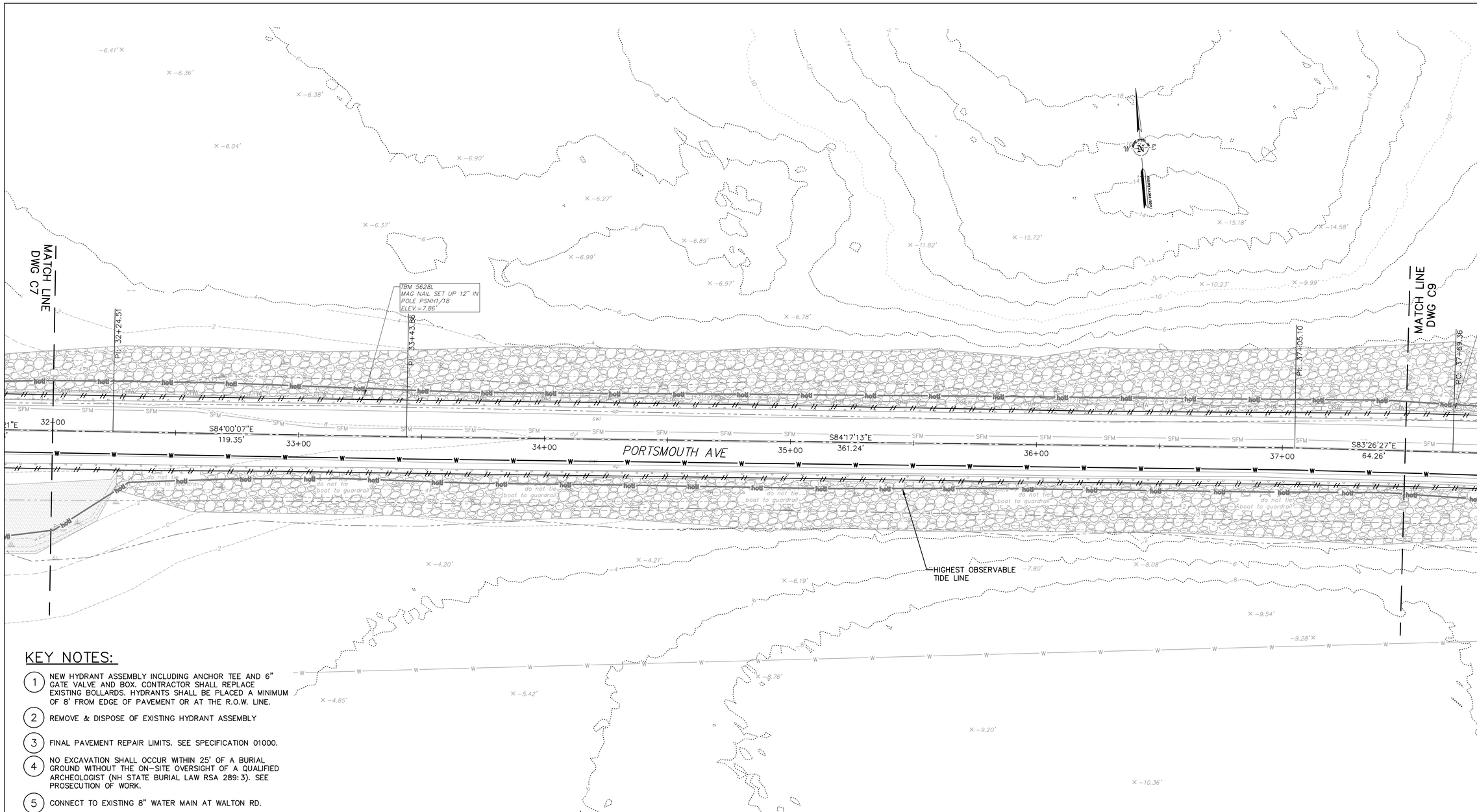

KEY NOTES:

1. NEW HYDRANT ASSEMBLY INCLUDING ANCHOR TEE AND 6" GATE VALVE AND BOX. CONTRACTOR SHALL REPLACE EXISTING BOLLARDS. HYDRANTS SHALL BE PLACED A MINIMUM OF 8' FROM EDGE OF PAVEMENT OR AT THE R.O.W. LINE.
2. REMOVE & DISPOSE OF EXISTING HYDRANT ASSEMBLY
3. FINAL PAVEMENT REPAIR LIMITS. SEE SPECIFICATION 01000.
4. NO EXCAVATION SHALL OCCUR WITHIN 25' OF A BURIAL GROUND WITHOUT THE ON-SITE OVERSIGHT OF A QUALIFIED ARCHEOLOGIST (NH STATE BURIAL LAW RSA 289:3). SEE PROSECUTION OF WORK.
5. CONNECT TO EXISTING 8" WATER MAIN AT WALTON RD.
6. NEW PIPE SHALL BE INSTALLED IN THE SAME ALIGNMENT & TRENCH AS THE EXISTING WATER MAIN PIPE. PROPOSED PIPE IS SHOWN OFFSET FROM EXISTING PIPE FOR CLARITY ONLY. EXISTING WATER MAIN TO BE REMOVED & DISPOSED OF. CONTRACTOR SHALL ANTICIPATE THE NEED FOR TEMPORARY WATER TO FACILITATE CONSTRUCTION OF NEW WATER MAIN.
7. PROPOSED LOCATION FOR CUT-IN VALVE TO FACILITATE TEMPORARY WATER CONNECTION.
8. CONTRACTOR TO PERFORM TEST PIT TO LOCATE EXISTING MAIN.
9. PROVIDE NEW BOLLARD TO MATCH TOWN STANDARD
10. FROM STA 62+50 TO STA 87+20 WATER MAIN MINIMUM BURY DEPTH SHALL BE 4' FROM CROWN WITH POLYSTYRENE INSULATION PER DETAIL DWG C18.
11. WATER MAIN TO CROSS BENEATH EXISTING DRAIN PIPE – MAINTAIN 12" CLEARANCE OR 6" CLEARANCE WITH INSULATION. SEE DETAIL DWG C18. DEFLECT WATER MAIN OR INSTALL BENDS AS REQUIRED.

PORTSMOUTH AVE PLAN VIEW

20 0 20 40

SCALE: 1 INCH = 20 FT.

ISSUE FOR	By
APPROVAL Date 4/9/2019	RHR
CONSTRUCTION Date –	By –
RECORD DWG Date –	By –

NO.	REVISIONS	APP'D

Drawn/Chk RMG
Designed RHR
Checked –
Approved –
Date 3/25/2019
Book No. 2331
Project No. 2331_phase
Dwg. ID 2331_phase
Scale AS SHOWN

FOR APPROVAL
NOT FOR CONSTRUCTION

UNDERWOOD engineers
25 Vaughan Mall, Portsmouth, N.H. 03801
Tel. 603-436-6192 Fax. 603-431-4733

PORTSMOUTH AVE PLAN
STA. 32+00 to STA. 37+50

WATER TRANSMISSION MAIN IMPROVEMENTS PROJECT

TOWN OF NEW CASTLE
NEW CASTLE, NEW HAMPSHIRE

DWG NO C8

H:\Real Number\New Castle\2331 New Castle Water Main\design drawings\2331_Phase.dwg, C8, 4/8/2019 11:43 PM, rmg

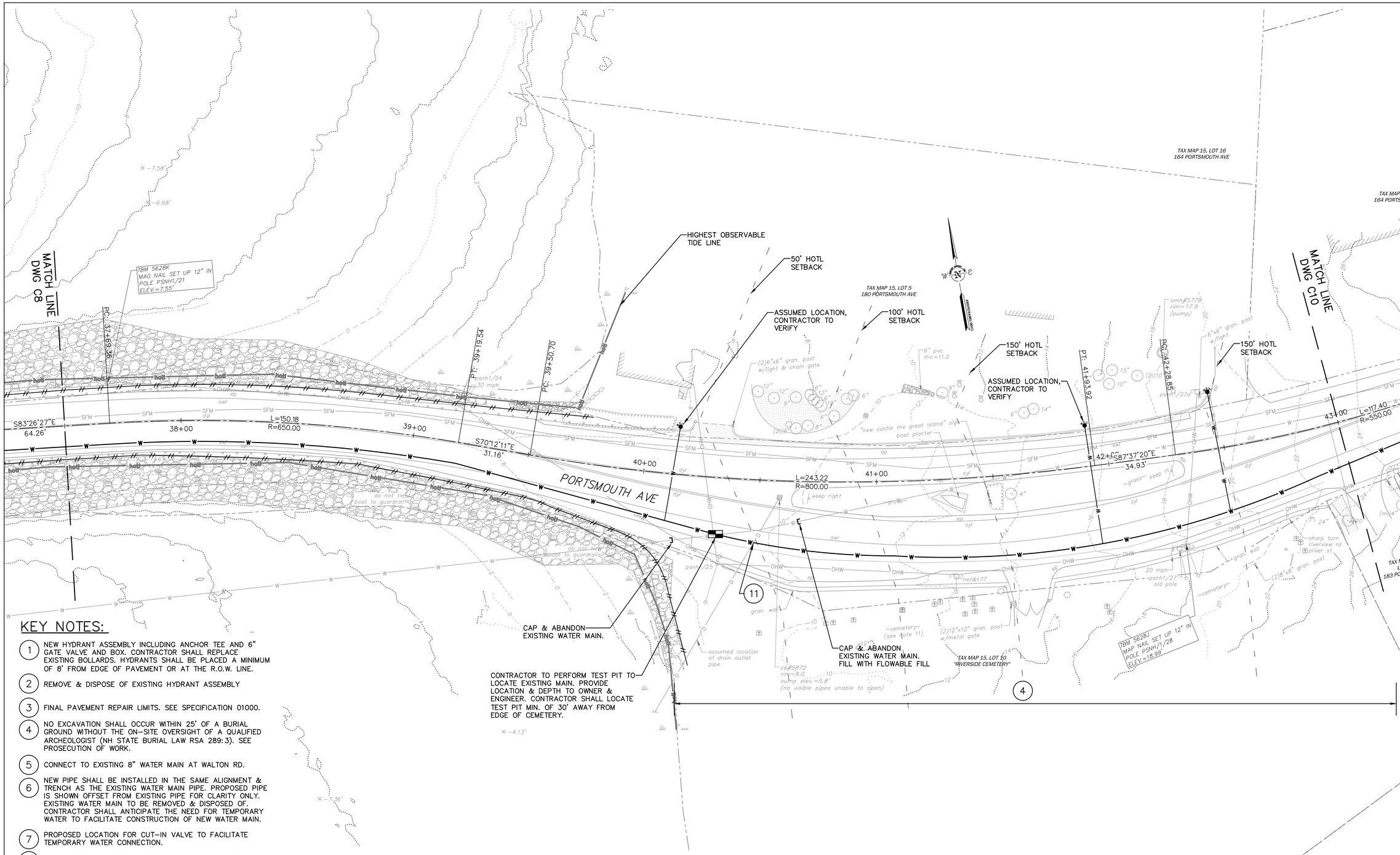

KEY NOTES:

1. NEW HYDRANT ASSEMBLY INCLUDING ANCHOR TEE AND 6" GATE VALVE AND BOX. CONTRACTOR SHALL REPLACE EXISTING BOLLARDS. HYDRANTS SHALL BE PLACED A MINIMUM OF 8' FROM EDGE OF PAVEMENT OR AT THE R.O.W. LINE.
2. REMOVE & DISPOSE OF EXISTING HYDRANT ASSEMBLY
3. FINAL PAVEMENT REPAIR LIMITS. SEE SPECIFICATION 01000.
4. NO EXCAVATION SHALL OCCUR WITHIN 25' OF A BURIAL GROUND WITHOUT THE ON-SITE OVERSIGHT OF A QUALIFIED ARCHEOLOGIST (NH STATE BURIAL LAW RSA 289:3). SEE PROSECUTION OF WORK.
5. CONNECT TO EXISTING 8" WATER MAIN AT WALTON RD.
6. NEW PIPE SHALL BE INSTALLED IN THE SAME ALIGNMENT & TRENCH AS THE EXISTING WATER MAIN PIPE. PROPOSED PIPE IS SHOWN OFFSET FROM EXISTING PIPE FOR CLARITY ONLY. EXISTING WATER MAIN TO BE REMOVED & DISPOSED OF. CONTRACTOR SHALL ANTICIPATE THE NEED FOR TEMPORARY WATER TO FACILITATE CONSTRUCTION OF NEW WATER MAIN.
7. PROPOSED LOCATION FOR CUT-IN VALVE TO FACILITATE TEMPORARY WATER CONNECTION.
8. CONTRACTOR TO PERFORM TEST PIT TO LOCATE EXISTING MAIN.
9. PROVIDE NEW BOLLARD TO MATCH TOWN STANDARD
10. FROM STA 62+50 TO STA 87+20 WATER MAIN MINIMUM BURY DEPTH SHALL BE 4' FROM CROWN WITH POLYSTYRENE INSULATION PER DETAIL DWG C18.
11. WATER MAIN TO CROSS BENEATH EXISTING DRAIN PIPE – MAINTAIN 12" CLEARANCE OR 6" CLEARANCE WITH INSULATION. SEE DETAIL DWG C18. DEFLECT WATER MAIN OR INSTALL BENDS AS REQUIRED.

PORTSMOUTH AVE PLAN VIEW

20 0 20 40
SCALE: 1 INCH = 20 FT.

NO.	REVISIONS	APP'D

ISSUE FOR
APPROVAL Date 4/9/2019 By RHR
CONSTRUCTION Date – By –
RECORD DWG Date – By –

Drawn/Chk. RMG
Designed RHR
Checked –
Approved –
Date 3/25/2019
Book No. 2331
Project No. 2331
Dwg. ID 2331. phase
Scale AS SHOWN

FOR APPROVAL
NOT FOR CONSTRUCTION

UNDERWOOD engineers
25 Vaughan Mall, Portsmouth, N.H. 03801
Tel. 603-436-6192 Fax. 603-431-4733

PORTSMOUTH AVE PLAN
STA. 37+50 to STA. 43+00

WATER TRANSMISSION MAIN IMPROVEMENTS PROJECT

TOWN OF NEW CASTLE
NEW CASTLE, NEW HAMPSHIRE

DWG NO C9

H:\Real Numbers\New Castle\2331 New Castle Water Main\design\drawings\2331_1Please.dwg C9, 4/8/2019 1:11:53 PM, rmg

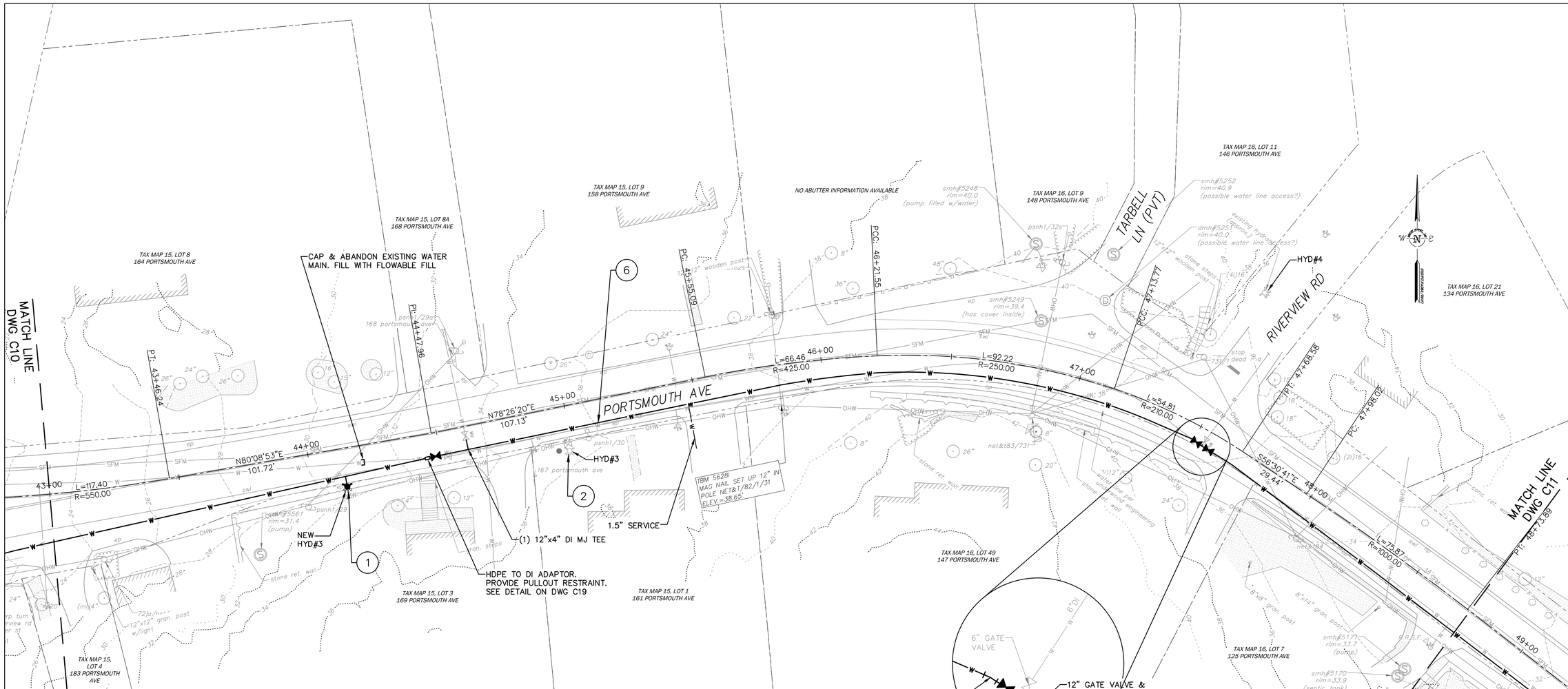

KEY NOTES:

1. NEW HYDRANT ASSEMBLY INCLUDING ANCHOR TEE AND 6" GATE VALVE AND BOX. CONTRACTOR SHALL REPLACE EXISTING BOLLARDS. HYDRANTS SHALL BE PLACED A MINIMUM OF 8' FROM EDGE OF PAVEMENT OR AT THE R.O.W. LINE.
2. REMOVE & DISPOSE OF EXISTING HYDRANT ASSEMBLY
3. FINAL PAVEMENT REPAIR LIMITS. SEE SPECIFICATION 01000.
4. NO EXCAVATION SHALL OCCUR WITHIN 25' OF A BURIAL GROUND WITHOUT THE ON-SITE OVERSIGHT OF A QUALIFIED ARCHEOLOGIST (NH STATE BURIAL LAW RSA 289:3). SEE PROSECUTION OF WORK.
5. CONNECT TO EXISTING 8" WATER MAIN AT WALTON RD.
6. NEW PIPE SHALL BE INSTALLED IN THE SAME ALIGNMENT & TRENCH AS THE EXISTING WATER MAIN PIPE. PROPOSED PIPE IS SHOWN OFFSET FROM EXISTING PIPE FOR CLARITY ONLY. EXISTING WATER MAIN TO BE REMOVED & DISPOSED OF. CONTRACTOR SHALL ANTICIPATE THE NEED FOR TEMPORARY WATER TO FACILITATE CONSTRUCTION OF NEW WATER MAIN.
7. PROPOSED LOCATION FOR CUT-IN VALVE TO FACILITATE TEMPORARY WATER CONNECTION.
8. CONTRACTOR TO PERFORM TEST PIT TO LOCATE EXISTING MAIN.
9. PROVIDE NEW BOLLARD TO MATCH TOWN STANDARD
10. FROM STA 62+50 TO STA 87+20 WATER MAIN MINIMUM BURY DEPTH SHALL BE 4' FROM CROWN WITH POLYSTYRENE INSULATION PER DETAIL DWG C18.
11. WATER MAIN TO CROSS BENEATH EXISTING DRAIN PIPE – MAINTAIN 12" CLEARANCE OR 6" CLEARANCE WITH INSULATION. SEE DETAIL DWG C18. DEFLECT WATER MAIN OR INSTALL BENDS AS REQUIRED.

PORTSMOUTH AVE PLAN VIEW

20 0 20 40
SCALE: 1 INCH = 20 FT.

NO.	REVISIONS	APP'D

ISSUE FOR
APPROVAL Date 4/9/2019 By RHR
CONSTRUCTION Date – By –
RECORD DWG Date – By –

Drawn/Chk RMG
Designed RHR
Checked –
Approved –
Date 3/25/2019
Book No. 2331
Project No. 2331
Dwg. ID 2331_gbase
Scale AS SHOWN

FOR APPROVAL
NOT FOR CONSTRUCTION

UNDERWOOD engineers
25 Vaughan Mall, Portsmouth, N.H. 03801
Tel. 603-436-6192 Fax. 603-431-4733

PORTSMOUTH AVE PLAN
STA. 43+00 to STA. 48+75

WATER TRANSMISSION MAIN IMPROVEMENTS PROJECT

TOWN OF NEW CASTLE
NEW CASTLE, NEW HAMPSHIRE

DWG NO C10

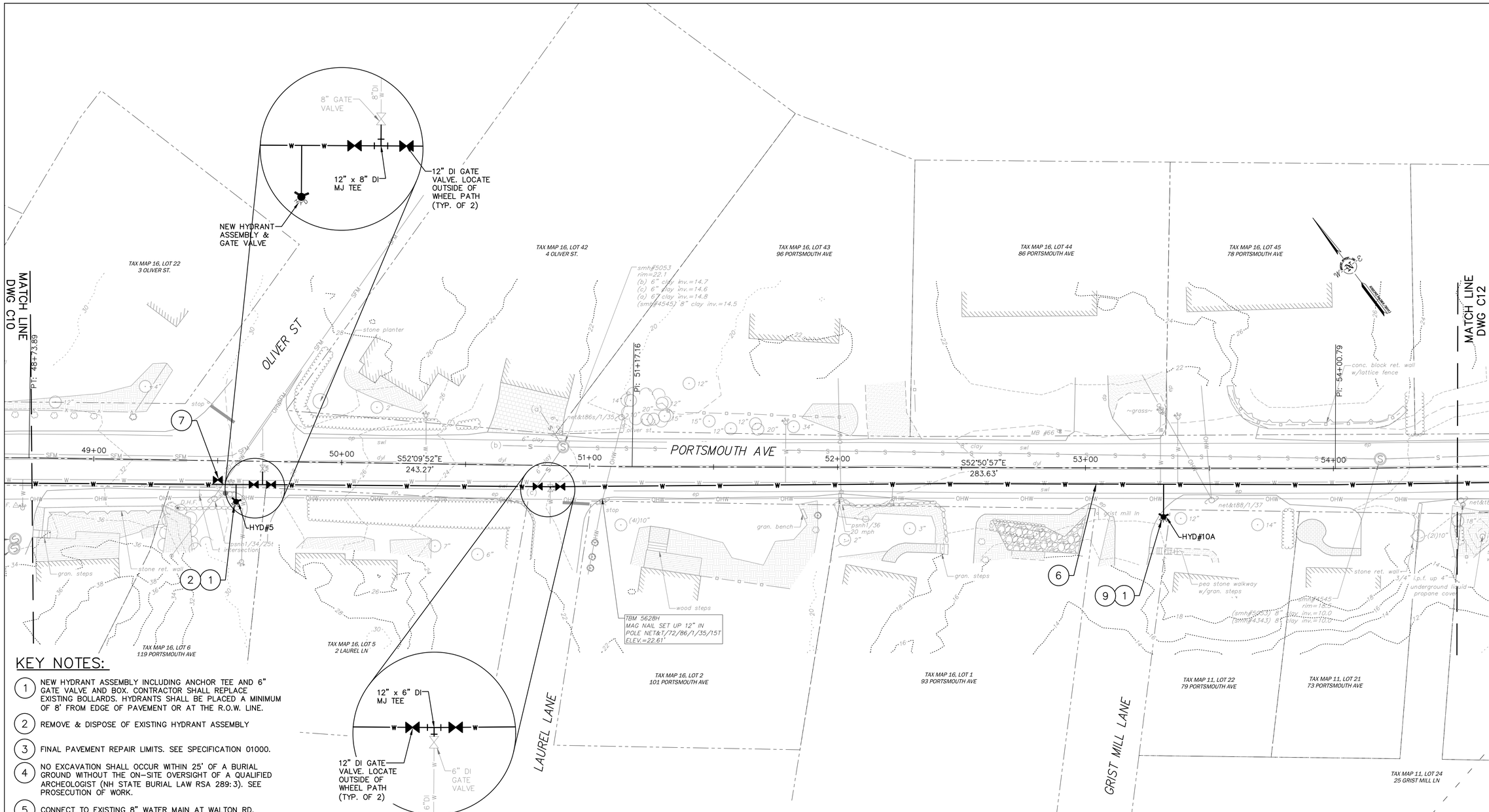

PORTSMOUTH AVE PLAN VIEW

KEY NOTES:

1. NEW HYDRANT ASSEMBLY INCLUDING ANCHOR TEE AND 6" GATE VALVE AND BOX. CONTRACTOR SHALL REPLACE EXISTING BOLLARDS. HYDRANTS SHALL BE PLACED A MINIMUM OF 8' FROM EDGE OF PAVEMENT OR AT THE R.O.W. LINE.
2. REMOVE & DISPOSE OF EXISTING HYDRANT ASSEMBLY
3. FINAL PAVEMENT REPAIR LIMITS. SEE SPECIFICATION 01000.
4. NO EXCAVATION SHALL OCCUR WITHIN 25' OF A BURIAL GROUND WITHOUT THE ON-SITE OVERSIGHT OF A QUALIFIED ARCHEOLOGIST (NH STATE BURIAL LAW RSA 289:3). SEE PROSECUTION OF WORK.
5. CONNECT TO EXISTING 8" WATER MAIN AT WALTON RD.
6. NEW PIPE SHALL BE INSTALLED IN THE SAME ALIGNMENT & TRENCH AS THE EXISTING WATER MAIN PIPE. PROPOSED PIPE IS SHOWN OFFSET FROM EXISTING PIPE FOR CLARITY ONLY. EXISTING WATER MAIN TO BE REMOVED & DISPOSED OF. CONTRACTOR SHALL ANTICIPATE THE NEED FOR TEMPORARY WATER TO FACILITATE CONSTRUCTION OF NEW WATER MAIN.
7. PROPOSED LOCATION FOR CUT-IN VALVE TO FACILITATE TEMPORARY WATER CONNECTION.
8. CONTRACTOR TO PERFORM TEST PIT TO LOCATE EXISTING MAIN.
9. PROVIDE NEW BOLLARD TO MATCH TOWN STANDARD
10. FROM STA 62+50 TO STA 87+20 WATER MAIN MINIMUM BURY DEPTH SHALL BE 4' FROM CROWN WITH POLYSTYRENE INSULATION PER DETAIL DWG C18.
11. WATER MAIN TO CROSS BENEATH EXISTING DRAIN PIPE – MAINTAIN 12" CLEARANCE OR 6" CLEARANCE WITH INSULATION. SEE DETAIL DWG C18. DEFLECT WATER MAIN OR INSTALL BENDS AS REQUIRED.

ISSUE FOR	By	APP'D
APPROVAL Date 4/9/2019	RHR	
CONSTRUCTION Date –	–	
RECORD DWG Date –	–	

NO.	REVISIONS

Drawn/Chk RMG
Designed RHR
Checked –
Approved –
Date 3/25/2019
Book No. 2331
Project No. 2331
Dwg. ID 2331_pbase
Scale AS SHOWN

FOR APPROVAL
NOT FOR CONSTRUCTION

UNDERWOOD engineers
25 Vaughan Mall, Portsmouth, N.H. 03801
Tel. 603-436-6192 Fax. 603-431-4733

PORTSMOUTH AVE PLAN
STA. 48+75 to STA. 54+50

WATER TRANSMISSION MAIN IMPROVEMENTS PROJECT
TOWN OF NEW CASTLE
NEW CASTLE, NEW HAMPSHIRE

DWG NO C11

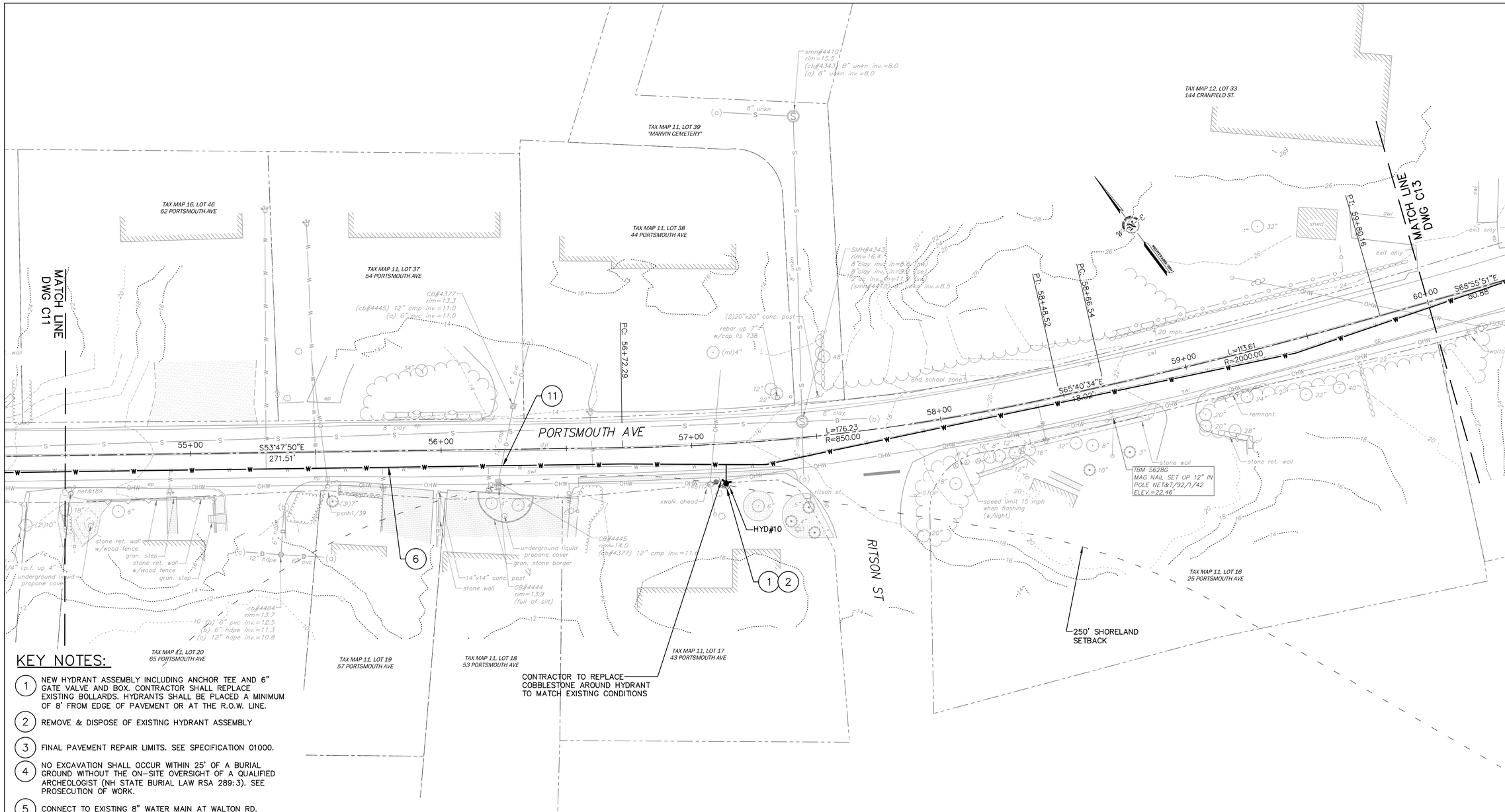

KEY NOTES:

1. NEW HYDRANT ASSEMBLY INCLUDING ANCHOR TEE AND 6" GATE VALVE AND BOX. CONTRACTOR SHALL REPLACE EXISTING BOLLARDS. HYDRANTS SHALL BE PLACED A MINIMUM OF 8' FROM EDGE OF PAVEMENT OR AT THE R.O.W. LINE.
2. REMOVE & DISPOSE OF EXISTING HYDRANT ASSEMBLY
3. FINAL PAVEMENT REPAIR LIMITS. SEE SPECIFICATION 01000.
4. NO EXCAVATION SHALL OCCUR WITHIN 25' OF A BURIAL GROUND WITHOUT THE ON-SITE OVERSIGHT OF A QUALIFIED ARCHEOLOGIST (NH STATE BURIAL LAW RSA 289:3). SEE PROSECUTION OF WORK.
5. CONNECT TO EXISTING 8" WATER MAIN AT WALTON RD.
6. NEW PIPE SHALL BE INSTALLED IN THE SAME ALIGNMENT & TRENCH AS THE EXISTING WATER MAIN PIPE. PROPOSED PIPE IS SHOWN OFFSET FROM EXISTING PIPE FOR CLARITY ONLY. EXISTING WATER MAIN TO BE REMOVED & DISPOSED OF. CONTRACTOR SHALL ANTICIPATE THE NEED FOR TEMPORARY WATER TO FACILITATE CONSTRUCTION OF NEW WATER MAIN.
7. PROPOSED LOCATION FOR CUT-IN VALVE TO FACILITATE TEMPORARY WATER CONNECTION.
8. CONTRACTOR TO PERFORM TEST PIT TO LOCATE EXISTING MAIN.
9. PROVIDE NEW BOLLARD TO MATCH TOWN STANDARD
10. FROM STA 62+50 TO STA 87+20 WATER MAIN MINIMUM BURY DEPTH SHALL BE 4' FROM CROWN WITH POLYSTYRENE INSULATION PER DETAIL DWG C18.
11. WATER MAIN TO CROSS BENEATH EXISTING DRAIN PIPE – MAINTAIN 12" CLEARANCE OR 6" CLEARANCE WITH INSULATION. SEE DETAIL DWG C18. DEFLECT WATER MAIN OR INSTALL BENDS AS REQUIRED.

PORTSMOUTH AVE PLAN VIEW

20 0 20 40

SCALE: 1 INCH = 20 FT.

NO.	REVISIONS	APP'D

ISSUE FOR
APPROVAL Date 4/9/2019 By RHR
CONSTRUCTION Date – By –
RECORD DWG Date – By –

Drawn/Chk. RMG
Designed RHR
Checked –
Approved –
Date 3/25/2019
Book No. 2331
Project No. 2331
Dwg. ID 2331.pbase
Scale AS SHOWN

FOR APPROVAL
NOT FOR CONSTRUCTION

UNDERWOOD engineers
25 Vaughan Mall, Portsmouth, N.H. 03801
Tel. 603-436-6192 Fax. 603-431-4733

PORTSMOUTH AVE PLAN
STA. 54+50 to STA. 60+00

WATER TRANSMISSION MAIN IMPROVEMENTS PROJECT

TOWN OF NEW CASTLE
NEW CASTLE, NEW HAMPSHIRE

DWG NO C12

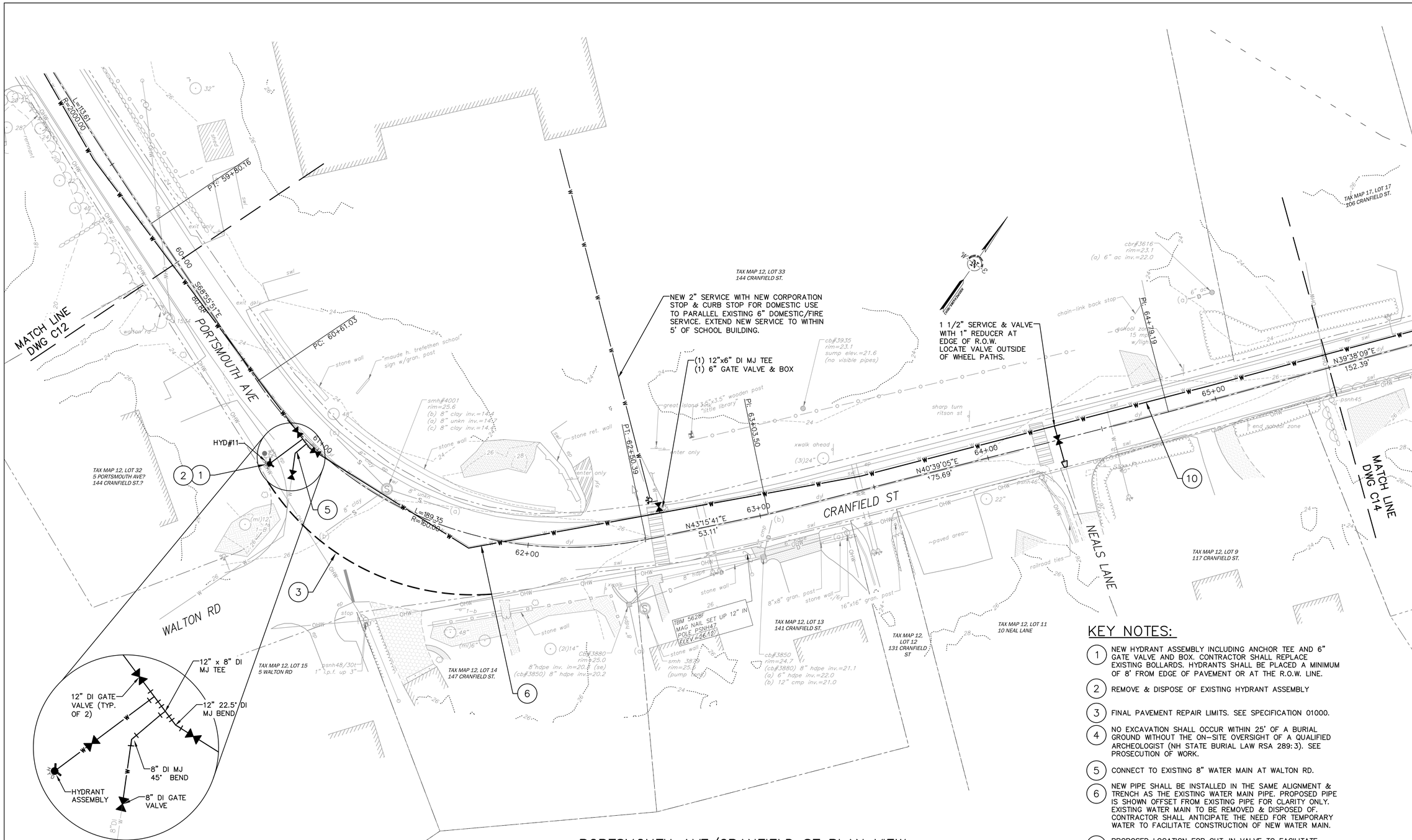

PORTSMOUTH AVE/CRANFIELD ST PLAN VIEW

SCALE: 1 INCH = 20 FT.

KEY NOTES:

1. NEW HYDRANT ASSEMBLY INCLUDING ANCHOR TEE AND 6" GATE VALVE AND BOX. CONTRACTOR SHALL REPLACE EXISTING BOLLARDS. HYDRANTS SHALL BE PLACED A MINIMUM OF 8' FROM EDGE OF PAVEMENT OR AT THE R.O.W. LINE.
2. REMOVE & DISPOSE OF EXISTING HYDRANT ASSEMBLY
3. FINAL PAVEMENT REPAIR LIMITS. SEE SPECIFICATION 01000.
4. NO EXCAVATION SHALL OCCUR WITHIN 25' OF A BURIAL GROUND WITHOUT THE ON-SITE OVERSIGHT OF A QUALIFIED ARCHEOLOGIST (NH STATE BURIAL LAW RSA 289:3). SEE PROSECUTION OF WORK.
5. CONNECT TO EXISTING 8" WATER MAIN AT WALTON RD.
6. NEW PIPE SHALL BE INSTALLED IN THE SAME ALIGNMENT & TRENCH AS THE EXISTING WATER MAIN PIPE. PROPOSED PIPE IS SHOWN OFFSET FROM EXISTING PIPE FOR CLARITY ONLY. EXISTING WATER MAIN TO BE REMOVED & DISPOSED OF. CONTRACTOR SHALL ANTICIPATE THE NEED FOR TEMPORARY WATER TO FACILITATE CONSTRUCTION OF NEW WATER MAIN.
7. PROPOSED LOCATION FOR CUT-IN VALVE TO FACILITATE TEMPORARY WATER CONNECTION.
8. CONTRACTOR TO PERFORM TEST PIT TO LOCATE EXISTING MAIN.
9. PROVIDE NEW BOLLARD TO MATCH TOWN STANDARD
10. FROM STA 62+50 TO STA 87+20 WATER MAIN MINIMUM BURY DEPTH SHALL BE 4' FROM CROWN WITH POLYSTYRENE INSULATION PER DETAIL DWG C18.
11. WATER MAIN TO CROSS BENEATH EXISTING DRAIN PIPE – MAINTAIN 12" CLEARANCE OR 6" CLEARANCE WITH INSULATION. SEE DETAIL DWG C18. DEFLECT WATER MAIN OR INSTALL BENDS AS REQUIRED.

ISSUE FOR	By
APPROVAL Date 4/9/2019	RHR
CONSTRUCTION Date	–
RECORD DWG Date	–

NO.	REVISIONS	APP'D

Drawn/Chk. RMG
Designed RHR
Checked –
Approved –
Date 3/25/2019
Book No.
Project No. 2331
Dwg. ID 2331_pbase
Scale AS SHOWN

FOR APPROVAL
NOT FOR CONSTRUCTION

UNDERWOOD engineers
25 Vaughan Mall, Portsmouth, N.H. 03801
Tel. 603-436-6192 Fax. 603-431-4733

PORTSMOUTH AVE & CRANFIELD ST
PLAN STA. 60+00 to 65+50

WATER TRANSMISSION MAIN IMPROVEMENTS PROJECT

TOWN OF NEW CASTLE
NEW CASTLE, NEW HAMPSHIRE

DWG NO C13

H:\Real Numbers\New Castle\2331 New Castle Water Main\design drawings\2331_Phase.dwg, C13, 4/9/2019 1:12:31 PM, rmg

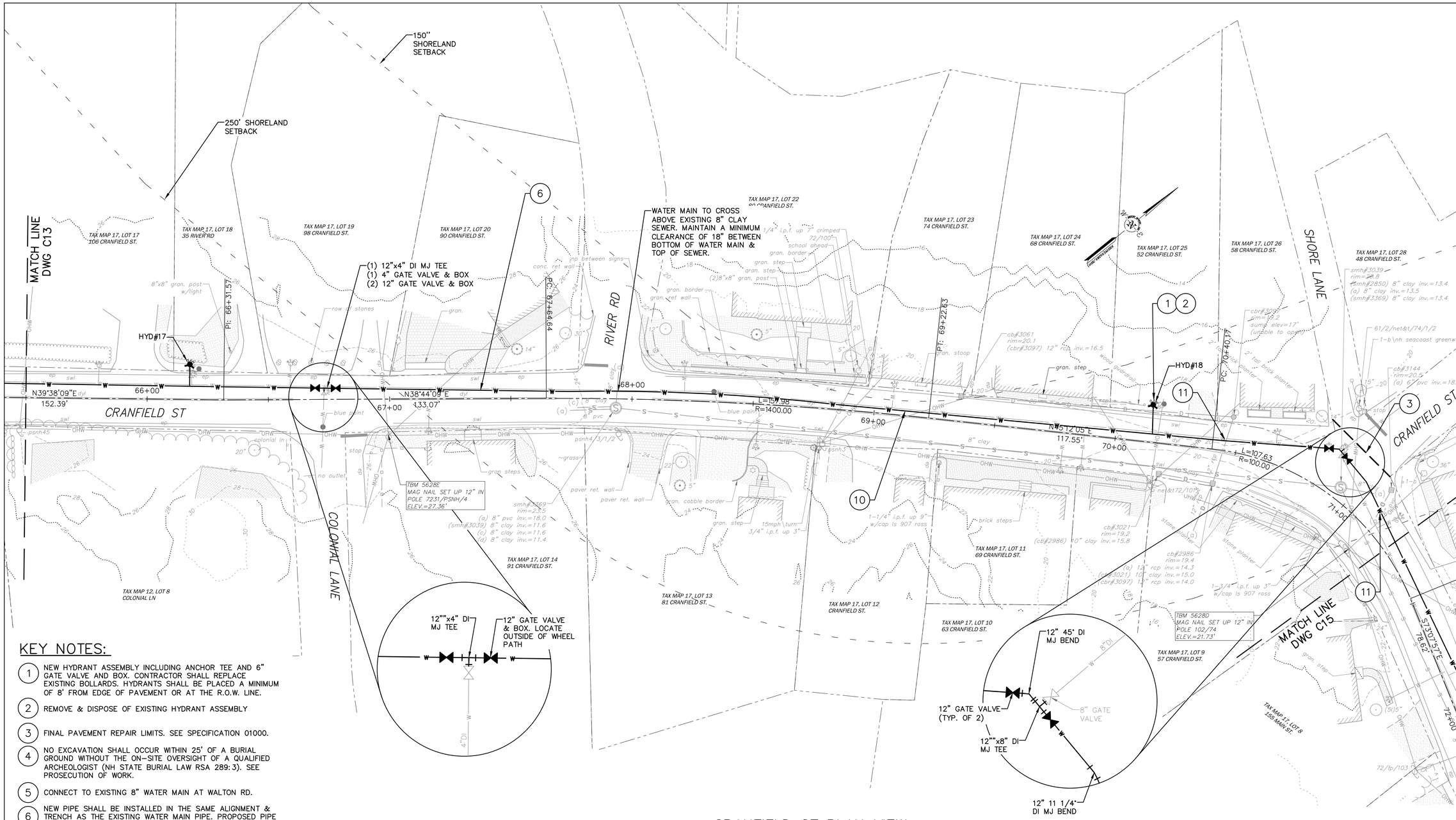

CRANFIELD ST PLAN VIEW

20 0 20 40

SCALE: 1 INCH = 20 FT.

KEY NOTES:

1. NEW HYDRANT ASSEMBLY INCLUDING ANCHOR TEE AND 6" GATE VALVE AND BOX. CONTRACTOR SHALL REPLACE EXISTING BOLLARDS. HYDRANTS SHALL BE PLACED A MINIMUM OF 8' FROM EDGE OF PAVEMENT OR AT THE R.O.W. LINE.
2. REMOVE & DISPOSE OF EXISTING HYDRANT ASSEMBLY
3. FINAL PAVEMENT REPAIR LIMITS. SEE SPECIFICATION 01000.
4. NO EXCAVATION SHALL OCCUR WITHIN 25' OF A BURIAL GROUND WITHOUT THE ON-SITE OVERSIGHT OF A QUALIFIED ARCHEOLOGIST (NH STATE BURIAL LAW RSA 289:3). SEE PROSECUTION OF WORK.
5. CONNECT TO EXISTING 8" WATER MAIN AT WALTON RD.
6. NEW PIPE SHALL BE INSTALLED IN THE SAME ALIGNMENT & TRENCH AS THE EXISTING WATER MAIN PIPE. PROPOSED PIPE IS SHOWN OFFSET FROM EXISTING PIPE FOR CLARITY ONLY. EXISTING WATER MAIN TO BE REMOVED & DISPOSED OF. CONTRACTOR SHALL ANTICIPATE THE NEED FOR TEMPORARY WATER TO FACILITATE CONSTRUCTION OF NEW WATER MAIN.
7. PROPOSED LOCATION FOR CUT-IN VALVE TO FACILITATE TEMPORARY WATER CONNECTION.
8. CONTRACTOR TO PERFORM TEST PIT TO LOCATE EXISTING MAIN.
9. PROVIDE NEW BOLLARD TO MATCH TOWN STANDARD
10. FROM STA 62+50 TO STA 87+20 WATER MAIN MINIMUM BURY DEPTH SHALL BE 4' FROM CROWN WITH POLYSTYRENE INSULATION PER DETAIL DWG C18.
11. WATER MAIN TO CROSS BENEATH EXISTING DRAIN PIPE – MAINTAIN 12" CLEARANCE OR 6" CLEARANCE WITH INSULATION. SEE DETAIL DWG C18. DEFLECT WATER MAIN OR INSTALL BENDS AS REQUIRED.

NO.	REVISIONS	APP'D

ISSUE FOR
APPROVAL Date 4/9/2019 By RHR
CONSTRUCTION Date – By –
RECORD DWG Date – By –

Drawn/Chk RMG
Designed RHR
Checked –
Approved –
Date 3/25/2019
Book No. 2331
Project No. 2331
Dwg. ID 2331_phase
Scale AS SHOWN

FOR APPROVAL
NOT FOR CONSTRUCTION

UNDERWOOD engineers
25 Vaughan Mall, Portsmouth, N.H. 03801
Tel. 603-436-6192 Fax. 603-431-4733

CRANFIELD ST. PLAN
STA. 65+50 to STA. 71+25

WATER TRANSMISSION MAIN IMPROVEMENTS PROJECT

TOWN OF NEW CASTLE
NEW CASTLE, NEW HAMPSHIRE

DWG NO C14

H:\Real Numbers\New Castle\2331 New Castle Water Main\design\drawings\2331_Phase.dwg, C14, 4/9/2019 1:12:43 PM, rmg

KEY NOTES:

1. NEW HYDRANT ASSEMBLY INCLUDING ANCHOR TEE AND 6" GATE VALVE AND BOX. CONTRACTOR SHALL REPLACE EXISTING BOLLARDS. HYDRANTS SHALL BE PLACED A MINIMUM OF 8' FROM EDGE OF PAVEMENT OR AT THE R.O.W. LINE.
2. REMOVE & DISPOSE OF EXISTING HYDRANT ASSEMBLY
3. FINAL PAVEMENT REPAIR LIMITS. SEE SPECIFICATION 01000.
4. NO EXCAVATION SHALL OCCUR WITHIN 25' OF A BURIAL GROUND WITHOUT THE ON-SITE OVERSIGHT OF A QUALIFIED ARCHEOLOGIST (NH STATE BURIAL LAW RSA 289:3). SEE PROSECUTION OF WORK.
5. CONNECT TO EXISTING 8" WATER MAIN AT WALTON RD.
6. NEW PIPE SHALL BE INSTALLED IN THE SAME ALIGNMENT & TRENCH AS THE EXISTING WATER MAIN PIPE. PROPOSED PIPE IS SHOWN OFFSET FROM EXISTING PIPE FOR CLARITY ONLY. EXISTING WATER MAIN TO BE REMOVED & DISPOSED OF. CONTRACTOR SHALL ANTICIPATE THE NEED FOR TEMPORARY WATER TO FACILITATE CONSTRUCTION OF NEW WATER MAIN.
7. PROPOSED LOCATION FOR CUT-IN VALVE TO FACILITATE TEMPORARY WATER CONNECTION.
8. CONTRACTOR TO PERFORM TEST PIT TO LOCATE EXISTING MAIN.
9. PROVIDE NEW BOLLARD TO MATCH TOWN STANDARD
10. FROM STA 62+50 TO STA 87+20 WATER MAIN MINIMUM BURY DEPTH SHALL BE 4' FROM CROWN WITH POLYSTYRENE INSULATION PER DETAIL DWG C18.
11. WATER MAIN TO CROSS BENEATH EXISTING DRAIN PIPE – MAINTAIN 12" CLEARANCE OR 6" CLEARANCE WITH INSULATION. SEE DETAIL DWG C18. DEFLECT WATER MAIN OR INSTALL BENDS AS REQUIRED.

MAIN ST PLAN VIEW

20 0 20 40

SCALE: 1 INCH = 20 FT.

ISSUE FOR	By	APP'D
APPROVAL Date 4/9/2019	RHR	
CONSTRUCTION Date –	–	
RECORD DWG Date –	–	

NO.	REVISIONS
1	
2	
3	
4	
5	
6	

Drawn/Chk. RMG
Designed RHR
Checked –
Approved –
Date 3/25/2019
Book No. 2331
Project No. 2331
Dwg. ID 2331_abase
Scale AS SHOWN

FOR APPROVAL
NOT FOR CONSTRUCTION

UNDERWOOD engineers
25 Vaughan Mall, Portsmouth, N.H. 03801
Tel. 603-436-6192 Fax. 603-431-4733

MAIN ST. PLAN
STA. 71+25 to STA. 77+00

WATER TRANSMISSION MAIN IMPROVEMENTS PROJECT
TOWN OF NEW CASTLE
NEW CASTLE, NEW HAMPSHIRE

DWG NO C15

SHEET 19 OF 37

H:\Real Numbers\New Castle\2331 New Castle Water Main\design drawings\2331_Plans.dwg, C15, 4/9/2019 1:12:53 PM, rmg

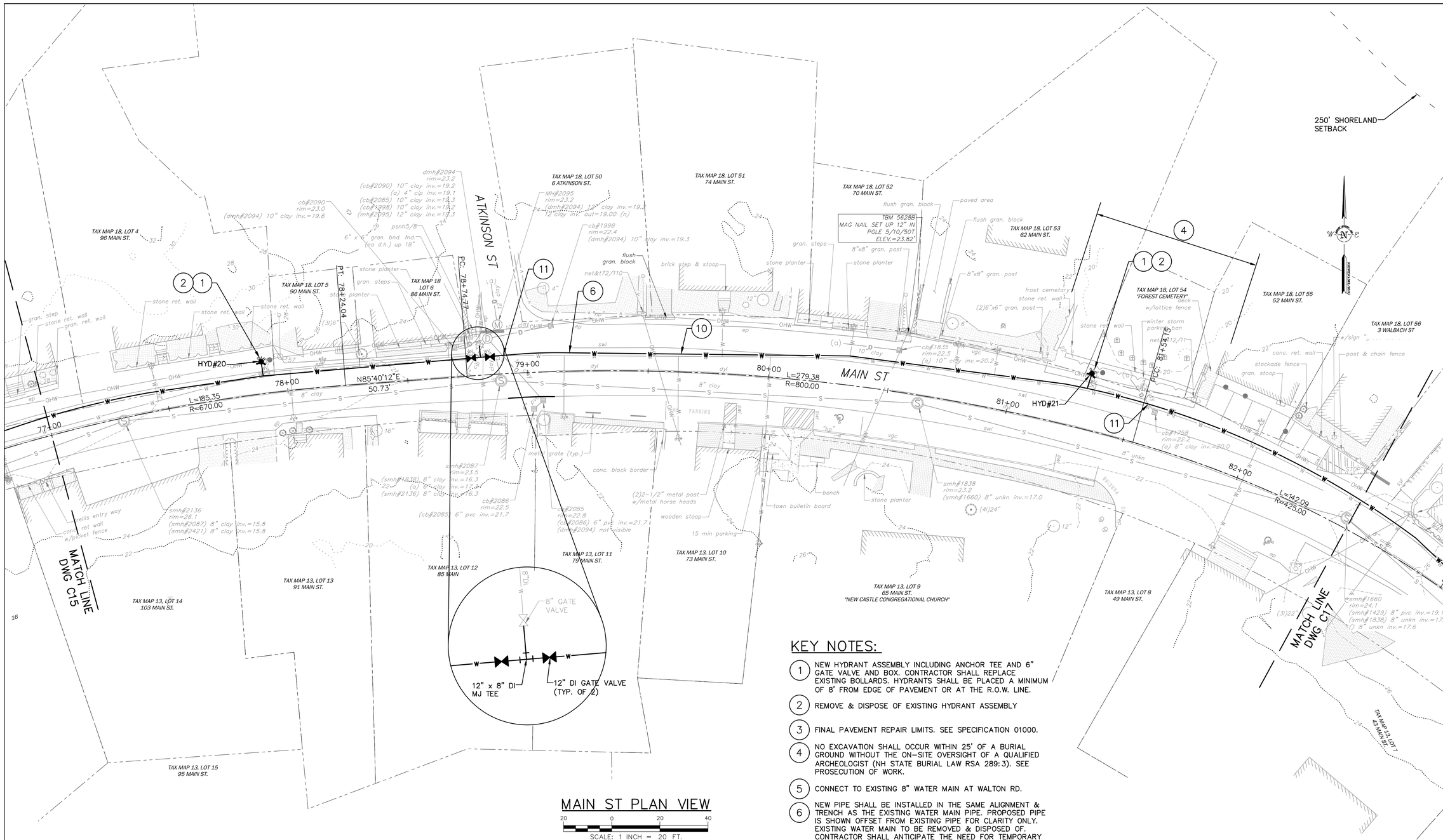

KEY NOTES:

1. NEW HYDRANT ASSEMBLY INCLUDING ANCHOR TEE AND 6" GATE VALVE AND BOX. CONTRACTOR SHALL REPLACE EXISTING BOLLARDS. HYDRANTS SHALL BE PLACED A MINIMUM OF 8' FROM EDGE OF PAVEMENT OR AT THE R.O.W. LINE.
2. REMOVE & DISPOSE OF EXISTING HYDRANT ASSEMBLY
3. FINAL PAVEMENT REPAIR LIMITS. SEE SPECIFICATION 01000.
4. NO EXCAVATION SHALL OCCUR WITHIN 25' OF A BURIAL GROUND WITHOUT THE ON-SITE OVERSIGHT OF A QUALIFIED ARCHEOLOGIST (NH STATE BURIAL LAW RSA 289:3). SEE PROSECUTION OF WORK.
5. CONNECT TO EXISTING 8" WATER MAIN AT WALTON RD.
6. NEW PIPE SHALL BE INSTALLED IN THE SAME ALIGNMENT & TRENCH AS THE EXISTING WATER MAIN PIPE. PROPOSED PIPE IS SHOWN OFFSET FROM EXISTING PIPE FOR CLARITY ONLY. EXISTING WATER MAIN TO BE REMOVED & DISPOSED OF. CONTRACTOR SHALL ANTICIPATE THE NEED FOR TEMPORARY WATER TO FACILITATE CONSTRUCTION OF NEW WATER MAIN.
7. PROPOSED LOCATION FOR CUT-IN VALVE TO FACILITATE TEMPORARY WATER CONNECTION.
8. CONTRACTOR TO PERFORM TEST PIT TO LOCATE EXISTING MAIN.
9. PROVIDE NEW BOLLARD TO MATCH TOWN STANDARD
10. FROM STA 62+50 TO STA 87+20 WATER MAIN MINIMUM BURY DEPTH SHALL BE 4' FROM CROWN WITH POLYSTYRENE INSULATION PER DETAIL DWG C18.
11. WATER MAIN TO CROSS BENEATH EXISTING DRAIN PIPE – MAINTAIN 12" CLEARANCE OR 6" CLEARANCE WITH INSULATION. SEE DETAIL DWG C18. DEFLECT WATER MAIN OR INSTALL BENDS AS REQUIRED.

MAIN ST PLAN VIEW

20 0 20 40

SCALE: 1 INCH = 20 FT.

ISSUE FOR	By	APP'D
APPROVAL Date 4/9/2019	RHR	
CONSTRUCTION Date –	By –	
RECORD DWG Date –	By –	

NO.	REVISIONS
1	
2	
3	
4	
5	
6	
7	
8	
9	
10	
11	

Drawn/Chk RMG
Designed RHR
Checked –
Approved –
Date 3/25/2019
Book No. 2331
Project No. 2331
Dwg. ID 2331.pbase
Scale AS SHOWN

FOR APPROVAL
NOT FOR CONSTRUCTION

UNDERWOOD engineers
25 Vaughan Mall, Portsmouth, N.H. 03801
Tel. 603-436-6192 Fax. 603-431-4733

MAIN ST. PLAN
STA. 77+00 to STA. 82+50

WATER TRANSMISSION MAIN IMPROVEMENTS PROJECT

TOWN OF NEW CASTLE
NEW CASTLE, NEW HAMPSHIRE

DWG NO C16

SHEET 20 OF 37

H:\Real Number\New Castle\2331 New Castle Water Main\design drawings\2331_Pbase.dwg C16, 4/9/2019 1:13:03 PM, rmg

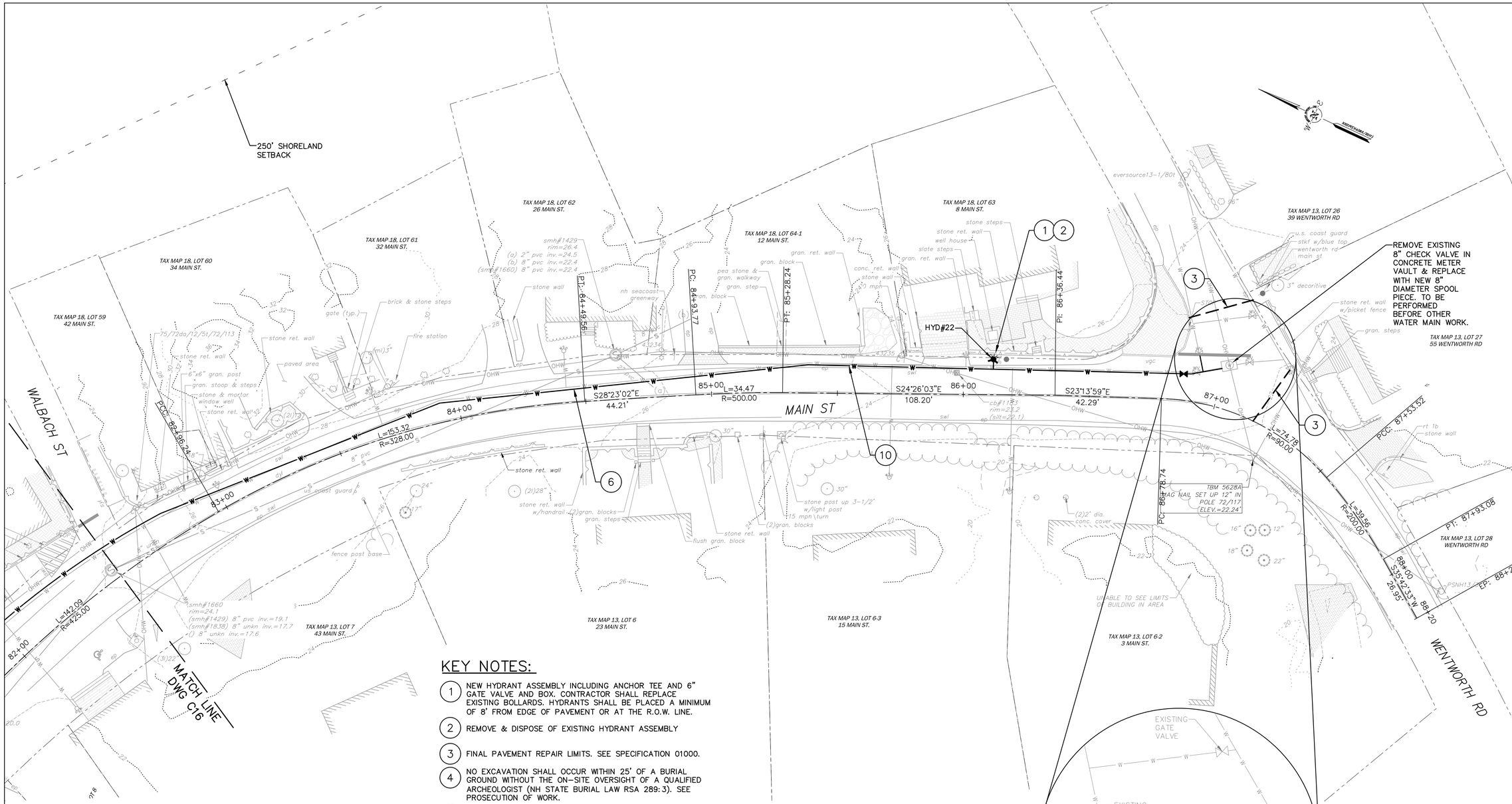

KEY NOTES:

1. NEW HYDRANT ASSEMBLY INCLUDING ANCHOR TEE AND 6" GATE VALVE AND BOX. CONTRACTOR SHALL REPLACE EXISTING BOLLARDS. HYDRANTS SHALL BE PLACED A MINIMUM OF 8' FROM EDGE OF PAVEMENT OR AT THE R.O.W. LINE.
2. REMOVE & DISPOSE OF EXISTING HYDRANT ASSEMBLY
3. FINAL PAVEMENT REPAIR LIMITS. SEE SPECIFICATION 01000.
4. NO EXCAVATION SHALL OCCUR WITHIN 25' OF A BURIAL GROUND WITHOUT THE ON-SITE OVERSIGHT OF A QUALIFIED ARCHEOLOGIST (NH STATE BURIAL LAW RSA 289:3). SEE PROSECUTION OF WORK.
5. CONNECT TO EXISTING 8" WATER MAIN AT WALTON RD.
6. NEW PIPE SHALL BE INSTALLED IN THE SAME ALIGNMENT & TRENCH AS THE EXISTING WATER MAIN PIPE. PROPOSED PIPE IS SHOWN OFFSET FROM EXISTING PIPE FOR CLARITY ONLY. EXISTING WATER MAIN TO BE REMOVED & DISPOSED OF. CONTRACTOR SHALL ANTICIPATE THE NEED FOR TEMPORARY WATER TO FACILITATE CONSTRUCTION OF NEW WATER MAIN.
7. PROPOSED LOCATION FOR CUT-IN VALVE TO FACILITATE TEMPORARY WATER CONNECTION.
8. CONTRACTOR TO PERFORM TEST PIT TO LOCATE EXISTING MAIN.
9. PROVIDE NEW BOLLARD TO MATCH TOWN STANDARD
10. FROM STA 62+50 TO STA 87+20 WATER MAIN MINIMUM BURY DEPTH SHALL BE 4' FROM CROWN WITH POLYSTYRENE INSULATION PER DETAIL DWG C18.
11. WATER MAIN TO CROSS BENEATH EXISTING DRAIN PIPE – MAINTAIN 12" CLEARANCE OR 6" CLEARANCE WITH INSULATION. SEE DETAIL DWG C18. DEFLECT WATER MAIN OR INSTALL BENDS AS REQUIRED.

MAIN ST PLAN VIEW

20 0 20 40

SCALE: 1 INCH = 20 FT.

ISSUE FOR	By	APP'D
APPROVAL Date 4/9/2019	RHR	
CONSTRUCTION Date _	_	
RECORD DWG Date _	_	

REVISIONS	NO.

Drawn/Chk. RMG
Designed RHR
Checked –
Approved –
Date 3/25/2019
Book No.
Project No. 2331
Dwg. ID 2331_pbase
Scale AS SHOWN

FOR APPROVAL
NOT FOR CONSTRUCTION

UNDERWOOD engineers
25 Vaughan Mall, Portsmouth, N.H. 03801
Tel. 603-436-6192 Fax. 603-431-4733

MAIN ST. PLAN
STA. 82+50 to END

WATER TRANSMISSION MAIN IMPROVEMENTS PROJECT
TOWN OF NEW CASTLE
NEW CASTLE, NEW HAMPSHIRE

DWG NO C17

SHEET 21 OF 37

H:\Real Numbers\New Castle\2331 New Castle Water Main\design\ drawings\2331_Pbase.dwg, C17, 4/9/2019 1:13:13 PM, rmg

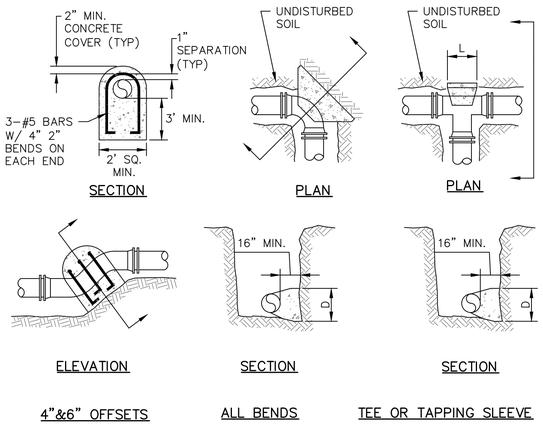

TYPICAL THRUST BLOCK DETAILS

NOT TO SCALE

THRUST BLOCK SCHEDULE

MINIMUM BEARING AREA
(SUQARE FEET)

	PIPE SIZE							
Nominal Dia. (in)	4	6	8	10	12	16	20	24
Tees, Caps, Plugs, & Tapping Sleeves	1.05	2.32	4.15	6.37	9.15	16.23	25.44	36.58
90 Degree Bends	1.48	3.29	5.86	9.01	12.93	22.96	35.97	51.73
45 Degree Bends	0.80	1.78	3.17	4.88	7.00	12.42	19.47	28.00
22½ Degree Bends	0.41	0.91	1.62	2.49	3.57	6.33	9.92	14.27
11¼ Degree Bends	0.21	0.46	0.81	1.25	1.79	3.18	4.99	7.17

System Pressure: 100 psi
Safety Factor: 1.5
Soil Bearing Capacity: 2,000 psf

THRUST BLOCK NOTES:

1. THE MINIMUM BEARING AREAS SHOWN ABOVE ARE BASED ON A SYSTEM PRESSURE OF 100 psi. IF THE SYSTEM PRESSURE IS ABOVE 100 psi, INCREASE THE NOTED AREAS PROPORTIONAL TO THE ACTUAL SYSTEM PRESSURE. FOR EXAMPLE, IF THE ACTUAL SYSTEM PRESSURE IS 160 psi, MULTIPLY THE ABOVE VALUES BY 160%.
2. PLACE THRUST BLOCKS SUCH THAT THE LENGTH (L) OF THE BLOCK IS APPROX. TWICE AS LONG AS THE DEPTH (D).
3. PLACE THRUST BLOCKS AGAINST UNDISTURBED SOIL.
4. PLACE THRUST BLOCKS ALONG THE FULL LENGTH OF THE FITTING TO MAXIMIZE BEARING AREA.
5. PLACE 2 LAYERS OF POLYETHYLENE OR ROOFING PAPER AROUND FITTINGS PRIOR TO PLACEMENT OF THE CONCRETE TO CREATE A BOND BREAK & PROTECT THE BOLTS.
6. PLACE A SOLID CONCRETE BLOCK BETWEEN CAP/PLUGS AND THRUST BLOCKS.
7. PLACE A 12" LONG STEEL HORSESHOE-SHAPED PICKUP HOOK IN ALL PLUG AND CAP THRUST BLOCKS. DIAMETER OF HOOK SHALL BE A MINIMUM OF 5/8".
8. USE OF THRUST BLOCKS DOES NOT ELIMINATE THE REQUIREMENT OF RETAINER GLANDS.
9. THRUST BLOCKS ARE REQUIRED ON ALL FITTINGS.
10. COAT ALL THREADED RODS, NUTS, AND BOLTS WITH BITUMINOUS PAINT.
11. ALL THRUST BLOCKS SHALL BE CAST-IN-PLACE CONCRETE UNLESS NOTED OTHERWISE.

TYPICAL THRUST BLOCK DETAILS

NOT TO SCALE UE

NOTES:

1. ALL FITTINGS SHALL BE MECHANICALLY RESTRAINED TO THE MINIMUM LENGTHS DESCRIBED SHOWN. THRUST BLOCKS WILL NO BE PERMITTED.
2. ALL MINIMUM LENGTHS SHOWN ABOVE WERE CALCULATED USING THE EBAA IRON RESTRAINT LENGTH CALCULATOR VERSION 6.3 USING THE FOLLOWING ASSUMPTIONS: DUCTILE IRON PIPE, TYPE 4 TRENCH, 5 FOOT DEPTH OF BURY, A TEST PRESSURE OF 150 PSI AND SOILS CONSISTING OF WELL GRADED SANDS AND GRAVELLY SANDS WITH LITTLE OR NO FINES.
3. ENGINEER RESERVES THE RIGHT TO MODIFY RESTRAINT LENGTHS REQUIRED BASED ON VARYING TRENCH CONDITIONS, DEPTH OF BURY OR PIPE MATERIALS.
4. FOR REDUCERS, LENGTH SHOWN IS TO RESTRAIN THE RUN OF LARGE PIPE INTO THE REDUCER.
5. MECHANICALLY RESTRAIN ONE JOINT ON EITHER SIDE OF THE TEE AT A MINIMUM DISTANCE OF 5'.
6. FITTINGS SHALL BE RESTRAINED AT ALL ENDS AND A MINIMUM OF ONE JOINT SHALL BE RESTRAINED BEYOND EACH SIDE OF FITTING.

REDUCERS:

Nom. Diameter of Large Pipe	Nominal Diameter of Small Pipe (Note 4)				
	4"	6"	8"	10"	12"
8"	17'	10'	–	–	–
10"	23'	17'	10'	–	–
12"	29'	24'	18'	10'	–
16"	39'	36'	31'	28'	18'

HORIZONTAL BENDS:

Nominal Pipe Diameter	Bend Angle			
	90°	45°	22.5°	11.25°
4"	6'	3'	2'	1'
6"	9'	4'	2'	2'
8"	11'	5'	3'	2'
10"	13'	6'	3'	2'
12"	16'	7'	3'	2'
16"	20'	9'	4'	2'

TEES:

Nominal Pipe	Nominal Branch Diameter (Note 5)			
	8"	10"	12"	16"
8"	6'	–	–	–
10"	8'	11'	–	–
12"	1'	7'	16'	–
16"	1'	1'	9'	25'

DEAD ENDS:

Nominal Pipe Diameter	Restrained Length (ft)
4"	13'
6"	18'
8"	23'
10"	28'
12"	33'
16"	43'

MECHANICAL JOINT RESTRAINT

NOT TO SCALE UE

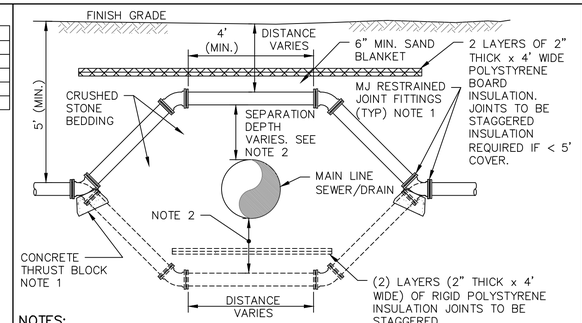

NOTES:

1. AVOID ABRUPT CHANGES IN DEPTH. INSTALL (4) FOUR 45° MJ BENDS WITH RESTRAINED JOINT FITTINGS OR THRUST RESTRAINT WHERE ABRUPT CHANGES IN DEPTH ARE NECESSARY.
2. SEPARATION DEPTH BETWEEN WATER AND SEWER SHALL BE 18" (MIN.) PER NHDES ENV-Wq 704.12. WHERE SEPARATION DEPTH IS LESS THAN 18" IN ORDER TO HAVE 4'-0" (MIN.) COVER OVER WATER MAIN, THEN SEWER SHALL BE PRESSURE PIPE, WHERE INDICATED ON DRAWINGS. PROVIDE 12" SEPARATION AT ALL DRAIN/WATER CROSSINGS UNLESS DIRECTED OTHERWISE.

WATER MAIN CROSSING DETAIL (SEWER OR DRAIN MAIN LINE CROSSING)

NOT TO SCALE UE

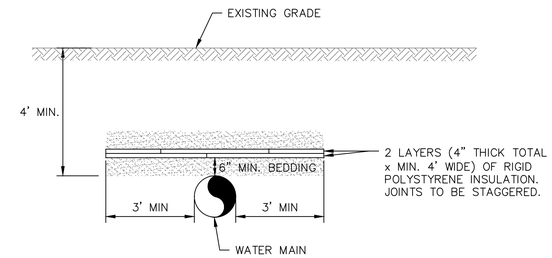

NOTES:

1. INSULATION TO BE USED WHERE PIPE DEPTH IS LESS THAN 5'. WHERE INDICATED ON THE PLANS OR DIRECTED BY THE ENGINEER.

WATER MAIN SHALLOW BURY DETAIL

NOT TO SCALE 2331

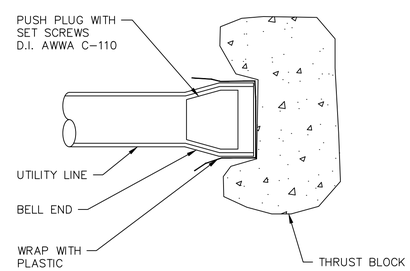

NOTE:

1. JOINT RESTRAINT IN ACCORDANCE WITH AWWA REQUIREMENTS.

TYPICAL CAP AND PLUG

NOT TO SCALE UE

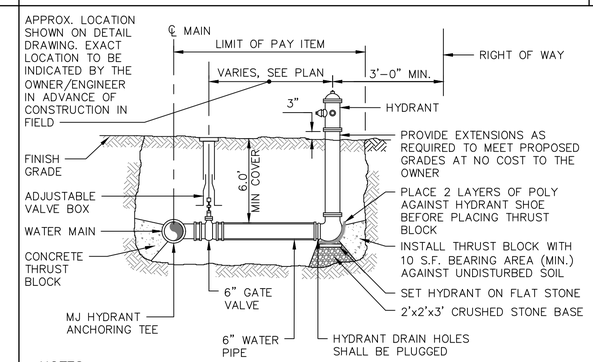

NOTES:

1. CARE SHALL BE TAKEN TO ASSURE THAT CONCRETE DOES NOT PLUG DRAIN PORTS.
2. HYDRANT ASSEMBLY INCLUDES MJ HYDRANT TEE 6" DI BRANCH PIPING, 6" GATE VALVE AND FINISH PAINTING.
3. HYDRANT SHALL BE KENNEDY K-811 GUARDIAN, OPEN RIGHT.
4. HYDRANTS SHALL BE PAINTED PER TOWN STANDARD & LABELED WITH THE HYDRANT NUMBER.

TYPICAL HYDRANT ASSEMBLY SECTION

NOT TO SCALE UE

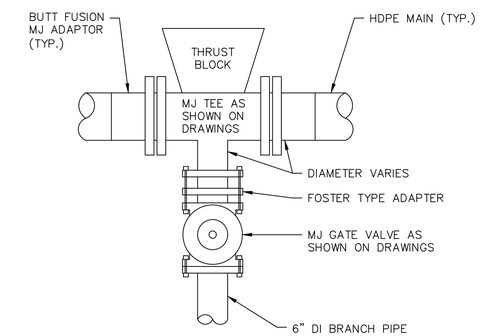

NOTE:

1. GATE VALVES SHALL OPEN RIGHT, PER TOWN STANDARDS.

HYDRANT TEE WITHIN HDPE MAIN

NOT TO SCALE 2331

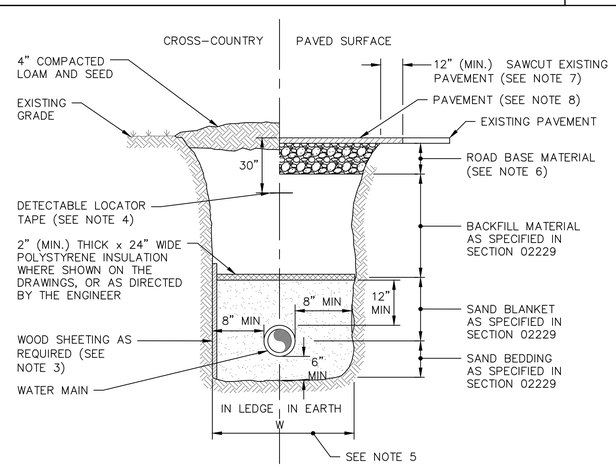

TYPICAL WATER TRENCH DETAIL

NOT TO SCALE UE

WATER TRENCH NOTES:

1. ORDERED EXCAVATION OF UNSUITABLE MATERIAL BELOW GRADE: BACKFILL AS STATED IN THE TECHNICAL SPECIFICATIONS OR AS SHOWN ON THE DRAWINGS.
2. MINIMUM COVER: SHALL NOT BE LESS THAN 6.0 FEET. PIPE SHALL BE INSTALLED DEEPER THAN THE NOTED MINIMUM COVER TO AVOID CONFLICTS WITH EXISTING AND PROPOSED UTILITIES.
3. WOOD SHEETING, IF REQUIRED: WHERE SHEETING IS PLACED ALONGSIDE THE PIPE AND EXTENDS BELOW MID-DIAMETER, IT SHALL BE CUT OFF AND LEFT IN PLACE TO AN ELEVATION 1 FOOT ABOVE THE TOP OF PIPE. WHERE SHEETING IS ORDERED BY THE ENGINEER TO BE LEFT IN PLACE, IT SHALL BE CUT OFF AT LEAST 3 FEET BELOW FINISHED GRADE, BUT NOT LESS THAN 1 FOOT ABOVE THE TOP OF THE PIPE.
4. LOCATOR TAPE TO BE 6" TERRA TAPE SENTRY LINE OR EQUAL.
5. W = MAXIMUM ALLOWABLE TRENCH PAYMENT WIDTH: SEE SECTION 01025.
6. ROAD BASE MATERIAL:
   a. FOR TRENCH PATCH: CRUSHED GRAVEL TO MATCH EXISTING GRAVEL THICKNESS OR 12" MINIMUM, WHICHEVER IS GREATER.
   b. FOR ROADWAY RECONSTRUCTION: SEE ROADWAY DETAILS DRAWING C-6.
7. SAWCUTTING EXISTING PAVEMENT: SAWCUT THE EXISTING PAVEMENT AT LEAST 12" BEYOND THE EDGE OF THE TRENCH. THE FINAL CUT SHALL BE SMOOTH, WITH NO JAGGED EDGES. REMOVE AND DISPOSE OF EXISTING PAVEMENT FROM THE TRENCH CUT.
8. PAVEMENT:
   a. FOR TRENCH PATCH: 2" BINDER (¾" MIX) AND 1" WEARING (½" MIX)
   b. FOR ROADWAY RECONSTRUCTION: SEE ROADWAY DETAILS DRAWING C-6.

NO.	REVISIONS	APP'D

ISSUE FOR
APPROVAL Date 4/9/2019 By RHR
CONSTRUCTION Date – By –
RECORD DWG Date – By –

Drawn/Chk RMG
Designed RHR
Checked –
Approved –
Date 3/25/2019
Book No.
Project No. 2331
Dwg. ID 2331_Cdetails
Scale AS SHOWN

FOR APPROVAL
NOT FOR CONSTRUCTION

UNDERWOOD engineers
25 Vaughan Mall, Portsmouth, N.H. 03801
Tel. 603-436-6192 Fax. 603-431-4733

WATER DETAILS

WATER TRANSMISSION MAIN IMPROVEMENTS PROJECT
TOWN OF NEW CASTLE
NEW CASTLE, NEW HAMPSHIRE

DWG NO C18
SHEET 22 OF 37

H:\Real Numbers\New Castle\2331 New Castle Water Main\design drawings\2331_Cdetails.dwg, C18, 4/9/2019 8:03:45 AM, rmg

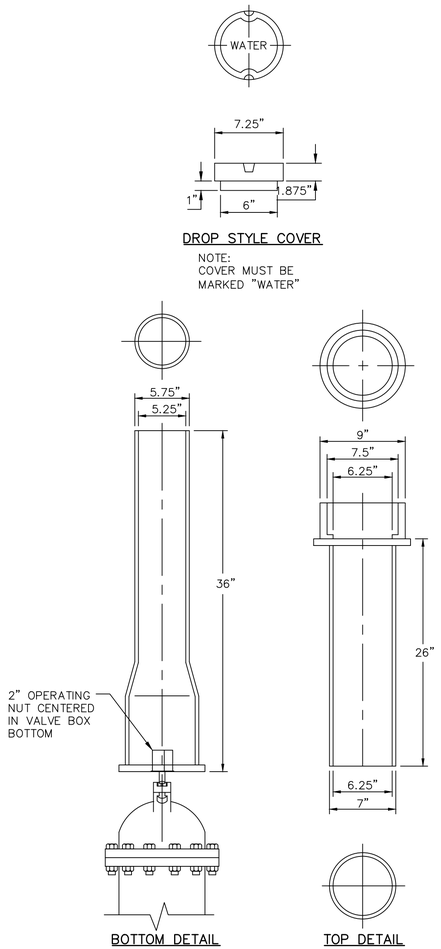

GATE VALVE AND VALVE BOX

NOT TO SCALE UE

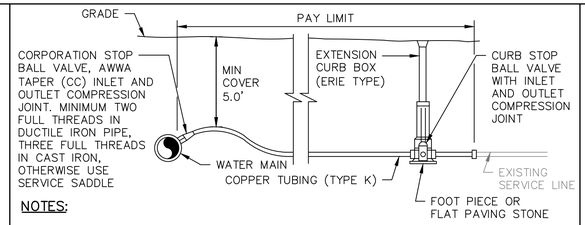

NOTES:

1. PROVIDE NEW LINE USING CONTINUOUS LENGTHS OF COPPER. NO COUPLING ALLOWED IN ROADWAY WITHOUT APPROVAL OF ENGINEER.
2. TAPS TO BE MADE AT APPROX. 2:00 AND 10:00.
3. PROVIDE FOR SERVICE LINE CONTRACTION AND EXPANSION BY INSTALLING "S" IN SERVICE LINE NEAR MAIN.
4. IF SERVICE IS INSTALLED WITH LESS THAN 5' COVER, INSULATE OVER LINE.
5. REMOVE EXISTING CURB STOP (SALVAGE AS IDENTIFIED IN SECT. 01611).
6. CONNECT CURB STOP TO EXISTING SERVICE LINE AT PROPERTY LINE OR AT LOCATION APPROVED BY THE ENGINEER AFTER PRESSURE TESTING AND DISINFECTION. SHUT OFF EXISTING CORPORATION AND REMOVE OR ABANDON EXISTING SERVICE LINE.
7. CURB BOX SHALL BE SET APPROXIMATELY 1'-0" FROM PROPERTY LINE.
8. 2" SERVICE CONNECTIONS SHALL USE A STAINLESS STEEL SERVICE SADDLE.

TYPICAL NEW SERVICE CONNECTION

NOT TO SCALE 2331

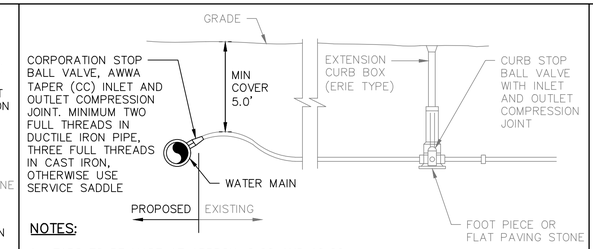

NOTES:

1. TAPS TO BE MADE AT APPROX. 2:00 AND 10:00.
2. CONNECT TO EXISTING SERVICE TO NEW CORPORATION STOP. IF EXISTING LINE DOES NOT REACH NEW MAIN & CORPORATION STOP, CONTRACTOR SHALL PROVIDE A LENGTH OF NEW SERVICE PIPE WITH A NEW COUPLING TO CONNECT TO EXISTING SERVICE.
3. PROVIDE FOR SERVICE LINE CONTRACTION AND EXPANSION BY INSTALLING "S" IN SERVICE LINE NEAR MAIN.
4. IF SERVICE IS INSTALLED WITH LESS THAN 5' COVER, INSULATE OVER LINE.
5. REMOVE EXISTING CURB STOP (SALVAGE AS IDENTIFIED IN SECT. 01611).
6. CONNECT CURB STOP TO EXISTING SERVICE LINE AFTER PRESSURE TESTING AND DISINFECTION.
7. 2" SERVICE CONNECTIONS SHALL USE A STAINLESS STEEL SERVICE SADDLE.

TYPICAL SERVICE CONNECTION

NOT TO SCALE 2331

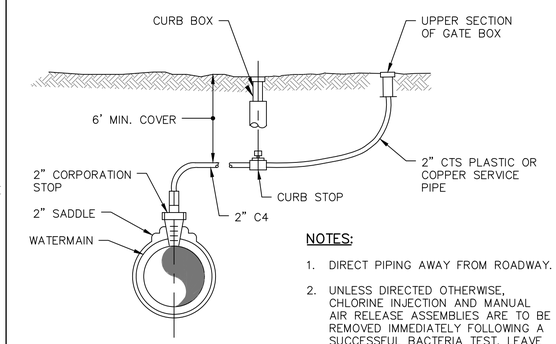

NOTES:

1. DIRECT PIPING AWAY FROM ROADWAY.
2. UNLESS DIRECTED OTHERWISE, CHLORINE INJECTION AND MANUAL AIR RELEASE ASSEMBLIES ARE TO BE REMOVED IMMEDIATELY FOLLOWING A SUCCESSFUL BACTERIA TEST. LEAVE THE CORPORATION STOP AND 12" LENGTH OF TUBING (WITH A CRIMPED END) IN PLACE.

TYPICAL TEMPORARY CHLORINE INJECTION TAP AND/OR MANUAL AIR RELEASE ASSEMBLY

NOT TO SCALE UE

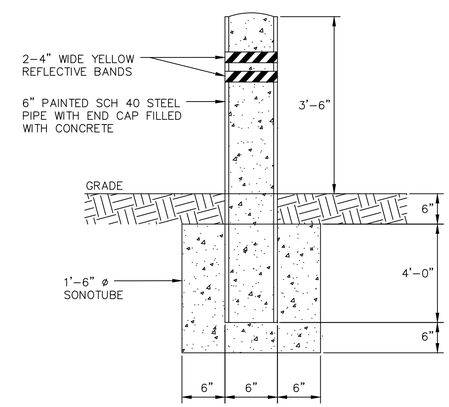

STEEL BOLLARD DETAIL

NOT TO SCALE UE

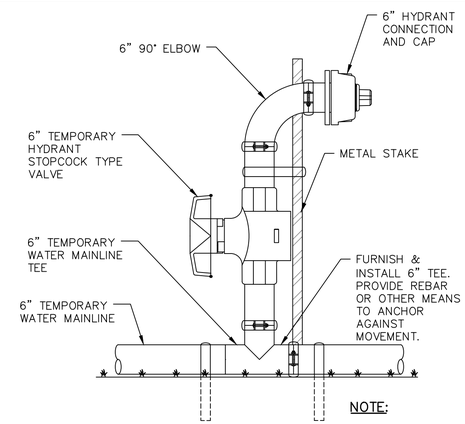

NOTE:

1. FASTEN TEMPORARY HYDRANT TO METAL STAKE.

TEMPORARY HYDRANT

NOT TO SCALE 2331

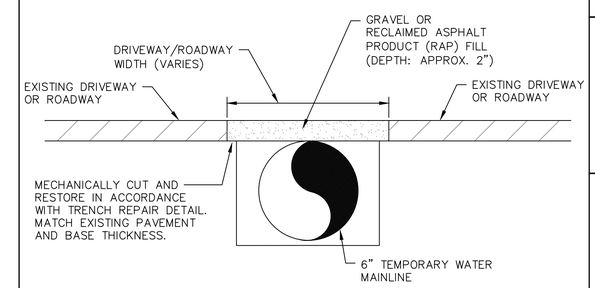

NOTES:

1. GRAVEL OR RAP FILL SHALL BE GRADED FLUSH WITH ROADWAY AND/OR DRIVEWAY FOR ENTIRE WIDTH OF ROADWAY OR DRIVEWAY.
2. CONTRACTOR SHALL BE RESPONSIBLE FOR MAINTAINING GRAVEL OR RAP FILL SO THAT IT IS KEPT IN A SAFE PASSABLE CONDITION.

BURIED TEMPORARY WATER

NOT TO SCALE 2331

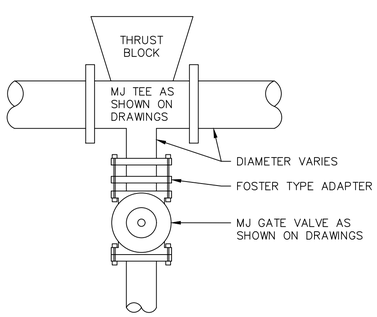

NOTE:

1. GATE VALVES SHALL OPEN RIGHT, PER TOWN STANDARDS.

TEE & GATE VALVE ASSEMBLY DETAIL (TYP)

NOT TO SCALE UE

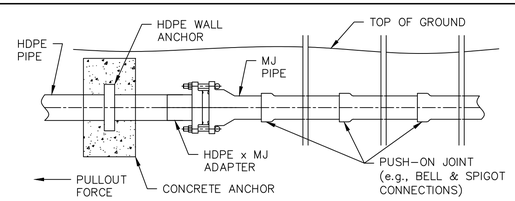

Pipe Size	OD (in)	Approximate Poisson Effect Pullout Force, lbs			Required Soil Bearing Area (SF)
		Operating at Full Rated Psi	During Pressure Tests at 150% of Rated Psi	Occasional Surge pressure (200% of rated psi)	
4"	4.75	2,634	3,073	4,682	3.51
6"	6.83	5,442	6,349	9,675	7.26
8"	8.95	9,361	10,921	16,642	12.48
10"	10.98	14,083	16,430	25,037	18.78
12"	13.06	19,916	23,235	35,406	26.55
16"	15.13	26,756	31,216	47,567	35.68

HDPE PIPE DR: 11
PIPE RATED PRESSURE: 200 PSI
SOIL BEARING CAPACITY: 2,000 PSF
SAFETY FACTOR 1.5

NOTES:

1. THE MINIMUM BEARING AREAS SHOWN ABOVE ARE BASED ON DR11 PIPE WITH A RATED PRESSURE OF 200 PSI. INFORM THE ENGINEER IF ACTUAL PIPE IS DIFFERENT.
2. BEFORE PRESSURE TESTING, ALL MECHANICAL JOINT RESTRAINTS MUST BE COMPLETELY INSTALLED AND SECURED PER MANUFACTURER'S INSTRUCTIONS, AND CONCRETE AT IN-LINE ANCHORS & THRUST BLOCKING MUST BE SUFFICIENTLY CURED AND PROPERLY BACKFILLED.

TYPICAL HDPE PULLOUT RESTRAINT DETAIL

NOT TO SCALE 2331

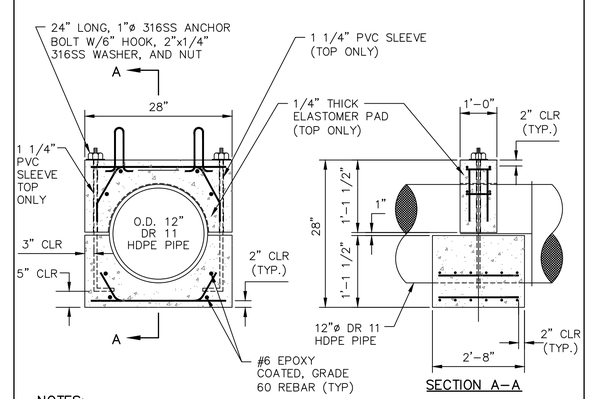

NOTES:

1. PIPE OPENING DIAMETER IN UPPER CONCRETE ANCHOR COLLAR TO BE 1/4" GREATER THAN THE OUTER DIAMETER OF THE PIPE.
2. CONCRETE ANCHOR COLLARS ARE SPACED APPROXIMATELY EVERY 10 FEET ALONG THE ENTIRE OUTFALL EXTENSION.

CONCRETE ANCHOR COLLAR

NOT TO SCALE 2331

ISSUE FOR	By	APP'D
APPROVAL Date 4/9/2019	RHR	
CONSTRUCTION Date –	By –	
RECORD DWG Date –	By –	

NO.	REVISIONS

Drawn/Chk. RMG
Designed RHR
Checked –
Approved –
Date 3/25/2019
Book No.
Project No. 2331
Dwg. ID 2331_Details
Scale AS SHOWN

FOR APPROVAL
NOT FOR CONSTRUCTION

UNDERWOOD engineers
25 Vaughan Mall, Portsmouth, N.H. 03801
Tel. 603-436-6192 Fax. 603-431-4733

WATER DETAILS

WATER TRANSMISSION MAIN IMPROVEMENTS PROJECT

TOWN OF NEW CASTLE
NEW CASTLE, NEW HAMPSHIRE

DWG NO C19

STORMWATER MANAGEMENT, EROSION & SEDIMENTATION CONTROL NOTES

1. A NPDES GENERAL PERMIT FOR CONSTRUCTION ACTIVITIES IS REQUIRED FOR THIS PROJECT. THE CONTRACTOR IS REQUIRED TO PREPARE AND SUBMIT BOTH A STORM WATER POLLUTION PREVENTION PLAN (SWPPP) AND A NOTICE OF INTENT (NOI) TO FULFILL PROJECT REQUIREMENTS. THE SWPPP MUST BE PREPARED IN ACCORDANCE WITH THE EPA'S REQUIREMENTS. NO WORK IS TO PROCEED UNTIL THE SWPPP AND THE NOI ARE SUBMITTED AND ACCEPTED BY THE OWNER AND THE ENGINEER.
2. THE CONTRACTOR SHALL SUBMIT, FOR REVIEW AND APPROVAL, A SCHEDULE TO INCLUDE ALL EARTHWORK ACTIVITIES IN ACCORDANCE WITH SECTION 01310 OF THE PROJECT MANUAL.
3. EXCAVATION AND EARTHWORK SHALL BE CONDUCTED IN A MANNER THAT WILL MINIMIZE EFFECTS OF EROSION THROUGHOUT CONSTRUCTION.
4. THE CONTRACTOR SHALL, TO THE EXTENT POSSIBLE, PHASE WORK ACTIVITIES SO THAT THE SMALLEST PRACTICAL LAND AREA IS EXPOSED AT ANY GIVEN TIME.
5. TEMPORARY SEEDING AND MULCH SHALL BE APPLIED AT ALL UNVEGETATED AREAS THAT WILL BE EXPOSED FOR A PERIOD EXCEEDING TWENTY (20) DAYS.
6. HAYBALES, SILT FENCING AND EROSION STONE SHALL BE INSTALLED WHERE NECESSARY TO MINIMIZE THE EFFECTS OF EROSION. THE EROSION CONTROL MEASURES SHOWN ON THESE PLANS SHALL BE CONSIDERED THE MINIMUM MEASURERS REQUIRED. IT SHALL BE THE CONTRACTOR'S RESPONSIBILITY TO PROVIDE ANY ADDITIONAL MEASURES THAT MAY BE REQUIRED WHERE NECESSARY TO OBTAIN THE OBJECTIVES DESCRIBED HEREIN. ALL WORK SHALL BE COMPLETED IN CONFORMANCE WITH THE LATEST EDITION OF "STORM WATER MANAGEMENT AND EROSION AND SEDIMENT CONTROL HANDBOOK FOR URBAN AND DEVELOPING AREAS IN NEW HAMPSHIRE." PREVENT THE DEGRADATION OF DOWNSTREAM PROPERTIES AND DRAINAGE.
7. DRAINAGE SWALES SHALL BE MONITORED AND MAINTAINED THROUGHOUT CONSTRUCTION. SILT SHALL BE PERIODICALLY REMOVED FROM SWALES AS NECESSARY TO PREVENT MIGRATION.
8. HAY BALE BARRIERS SHALL BE INSTALLED ALONG SWALES AT 100 FOOT INTERVALS, AROUND CATCH BASINS AND AT ALL AREAS WHERE STORMWATER OR TRENCHWATER ARE CONCENTRATED.
9. HAY BALE BARRIERS AND SEDIMENT TRAPS ARE TO BE MAINTAINED AND KEPT CLEAN UNTIL ALL EXPOSED AREAS HAVE A HEALTHY STAND OF GROUND COVER, AT WHICH TIME TEMPORARY MEASURES ARE TO BE REMOVED. CONTRACTOR IS RESPONSIBLE FOR PROPER DISPOSAL OF SILT AND TEMPORARY MATERIALS REMOVED.
10. DISTURBED AREAS SHALL BE LOAMED AND SEEDED. MINIMUM DEPTH OF LOAM SHALL BE 4 INCHES.
11. PROVIDE SEED (PARK MIXTURE), LIME, FERTILIZER AND MULCH PER SECTION 02935 OF THE PROJECT MANUAL.

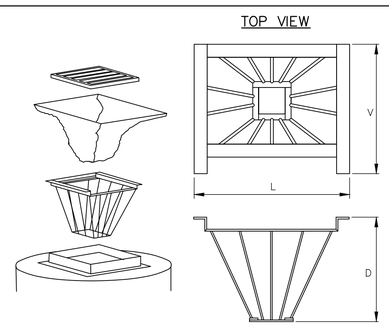

NOTES:

1. INSTALL APPROPRIATE METAL BASKET.
2. A. GEOTEXTILE FABRIC SHALL BE POLYESTER, POLYPROPYLENE, STABILIZED NYLON, POLYETHYLENE, OR POLYETHYLENE CHLORIDE MEETING THE FOLLOWING:
   a. GRAB STRENGTH: 45# MIN. IN ANY PRINCIPAL DIRECTION (ASTM D1682)
   b. MULEN BURST STRENGTH: 60 PSI MIN. (ASTM D771)
   B. FABRIC SHALL HAVE AN OPENING NO GREATER THAN A #20 SIEVE AND A MIN. PERMEABILITY OF 120 GPM/SQ. FT.
3. FILTER FABRIC SHALL BE PUSHED DOWN AND FORMED TO THE SHAPE OF THE BASKET. THE SHEET FABRIC SHALL BE LARGE ENOUGH TO BE SUPPORTED BY THE BASKET FRAME WHEN HOLDING SEDIMENT AND EXTEND AT LEAST 6 INCHES PAST THE FRAME. GRATE INLET SHALL BE PLACED OVER THE BASKET/FRAME AND WILL ANCHOR THE FABRIC.
4. INSPECT BASKET DAILY OR MORE FREQUENTLY DURING STORM EVENTS.
5. SEDIMENT SHALL BE REMOVED AFTER EACH STORM EVENT OR MORE FREQUENTLY TO PREVENT CLOGGING.
6. USE OF INLET FILTER DOES NOT RELIEVE THE CONTRACTOR OF THE RESPONSIBILITY OF MAINTAINING OTHER EROSION CONTROL MEASURES AS MAY BE REQUIRED OR FROM STABILIZING DISTURBED AREAS AS SOON AS PRACTICAL.

CATCH BASIN INLET FILTER

NOT TO SCALE

SILT FENCE CONSTRUCTION NOTES:

1. SILT FENCE TO BE CONSTRUCTED AT LOCATIONS SHOWN ON THE PLANS BEFORE CONSTRUCTION PROCEEDS. FENCE SHALL BE MAINTAINED THROUGHOUT ENTIRE DURATION OF CONSTRUCTION UNTIL GROUND COVER IS ESTABLISHED.
2. PLACE HAY BALES BEHIND SILT FENCE AS REQUIRED TO MAINTAIN FENCE IN AND UPRIGHT POSITION, OR AS DIRECTED BY THE ENGINEER.

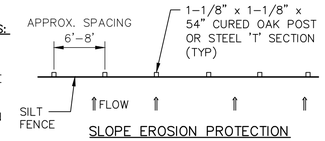

SLOPE EROSION PROTECTION

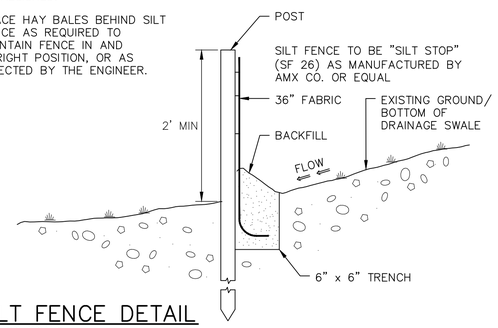

SILT FENCE DETAIL

NOT TO SCALE

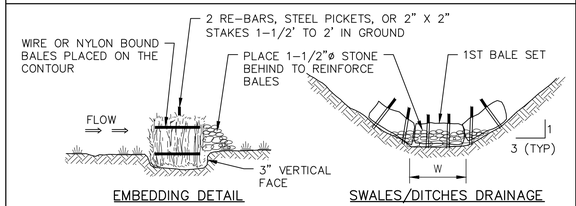

EMBEDDING DETAIL SWALES/DITCHES DRAINAGE

HAY BALE BARRIER CONSTRUCTION SPECIFICATIONS:

1. BALES SHALL BE PLACED IN A ROW WITH ENDS TIGHTLY BUTTED.
2. EACH BALE SHALL BE EMBEDDED IN THE SOIL A MINIMUM OF 3".
3. BALES SHALL BE SECURELY ANCHORED IN PLACE BY STAKE OR RE–BARS DRIVEN THROUGH THE BALES. THE FIRST STAKE IN EACH BALE SHALL BE ANGLED TOWARD PREVIOUSLY LAID BALE TO FORCE BALES TOGETHER.
4. INSPECTION SHALL BE FREQUENT AND REPAIR OR REPLACEMENT SHALL BE MADE PROMPTLY AS NEEDED.
5. BALES SHALL BE REMOVED, WHEN THEY HAVE SERVED THEIR PURPOSE, SO AS NOT TO BLOCK OR IMPEDE STORM FLOW OR DRAINAGE.
6. BARRIERS SHALL BE SPACED AT 100' ALONG DRAINAGE SWALES/ DITCHES.

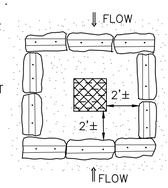

CATCH BASIN EROSION PROTECTION

HAY BALE DETAIL

NOT TO SCALE

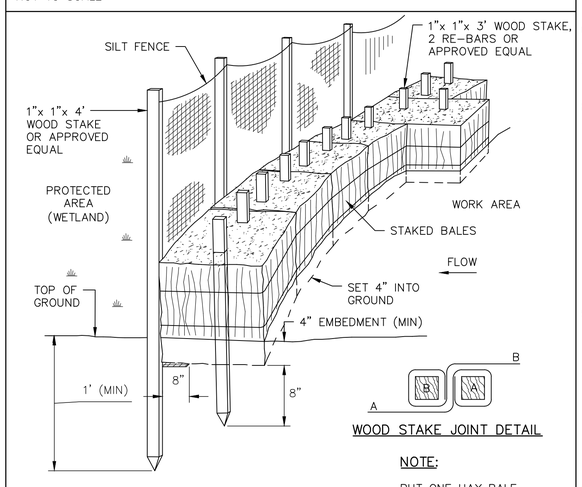

WOOD STAKE JOINT DETAIL

NOTE:

PUT ONE HAY BALE PERPENDICULAR ALONG HAY BALE BARRIER (100' O.C.)

SILT FENCE WITH HAY BALES

NOT TO SCALE

NOTES:

1. ALL TEMPORARY, DAMAGED OR DEFECTIVE PAVEMENT SHALL BE REMOVED PRIOR TO PLACEMENT OF PERMANENT TRENCH REPAIRS.
2. BINDER COURSE PAVEMENT EDGES SHALL BE DEFINED BY A STRAIGHT EDGE FORMED BY A MACHINED SAW CUT.
3. SEE TABLE IN "TEMPORARY PAVEMENT REPAIR" FOR TRENCH WIDTHS.
4. SUBGRADE MATERIAL SHALL BE BACKFILLED WITH GRANULAR FILL AND COMPACTED TO 95% OF ITS MAXIMUM DRY DENSITY.
5. BACKFILL MATERIAL TO BE USED SHALL MATCH EXISTING MATERIAL UNLESS OTHERWISE SPECIFIED BY TOWN ENGINEER OR THEIR DESIGNEE.
6. ALL VERTICAL AND HORIZONTAL JOINTS BETWEEN PAVEMENTS SHALL BE TACK COATED.
7. PAVEMENT THICKNESS SHALL MATCH EXISTING BUT IN NO CASE SHALL BE LESS THAN 4" TOTAL THICKNESS.
8. PAVEMENT SHALL BE PLACED IN TWO PHASES.
   8.1 THE FIRST PHASE SHALL CONSIST OF CUTTING BACK THE FULL DEPTH OF PAVEMENT 12" BEYOND THE EDGES OF THE DISTURBED TRENCH AND PAVING A BINDER COURSE THE FULL DEPTH OF THE PAVEMENT AS TO BRING THE PATCH FLUSH WITH THE EXISTING ROAD SURFACE.
   8.2 THE SECOND PHASE SHALL BE CONDUCTED THE FOLLOWING YEAR AND SHALL CONSIST OF MILLING THE EXISTING SURFACE 18" BEYOND THE EDGE OF THE TEMPORARY REPAIR TO A DEPTH OF 1.5". 1.5" WEARING COURSE PAVEMENT SHALL BE USED TO CREATE A SMOOTH SURFACE WITH THE ROADWAY.
9. ANY EXCAVATION WITHIN A TOWN RIGHT–OF–WAY REQUIRES PRE–APPROVAL BY DPW AND IS SUBJECT TO INSPECTION TO ENSURE COMPLIANCE WITH TOWN STANDARDS.

PAVEMENT REPAIR DETAIL

NOT TO SCALE 2331

NOTE:

THE DIMENSIONS SHOWN SHALL BE CONSIDERED MAXIMUM PAVEMENT PAYMENT WIDTHS FOR 0–10' DEEP CONSTRUCTION. Wt SHALL BE INCREASED BY 4'–0" FOR TRENCHES 10' TO 15' AND BY 8'–0" FOR TRENCHES 15' TO 20' IN DEPTH.

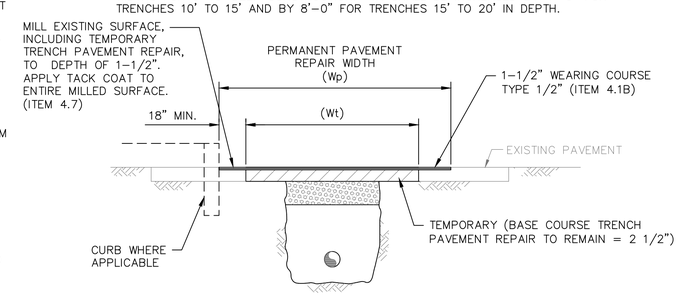

PERMANENT PAVEMENT REPAIRS

NOTE:

THE DIMENSIONS SHOWN SHALL BE CONSIDERED MAXIMUM PAVEMENT PAYMENT WIDTHS FOR 0–10' DEEP CONSTRUCTION. Wt SHALL BE INCREASED BY 4'–0" FOR TRENCHES 10' TO 15' AND BY 8'–0" FOR TRENCHES 15' TO 20' IN DEPTH.

MAXIMUM TRENCH PAVEMENT WIDTHS

PIPE I.D.	Wt (INCHES)	Wp (INCHES)
8–18 INCHES	72	AS SHOWN IN SPECIFICATION SECTION 01000

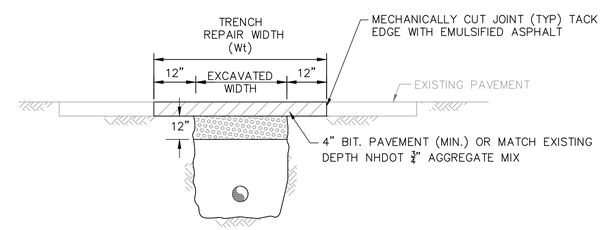

TRENCH PAVEMENT REPAIR

ISSUE FOR			
APPROVAL Date 4/9/2019 By RHR			
CONSTRUCTION Date – By –			
RECORD DWG Date – By –			
APP'D	REVISIONS	NO.	△

Drawn/Chk RMG
Designed RHR
Checked –
Approved –
Date 3/25/2019
Book No.
Project No. 2331
Dwg. ID 2331_Cdetails
Scale AS SHOWN

FOR APPROVAL
NOT FOR CONSTRUCTION

UNDERWOOD engineers
25 Vaughan Mall, Portsmouth, N.H. 03801
Tel. 603–436–6192 Fax. 603–431–4733

ROADWAY & EROSION CONTROL NOTES & DETAILS

WATER TRANSMISSION MAIN IMPROVEMENTS PROJECT

TOWN OF NEW CASTLE
NEW CASTLE, NEW HAMPSHIRE

DWG NO C20

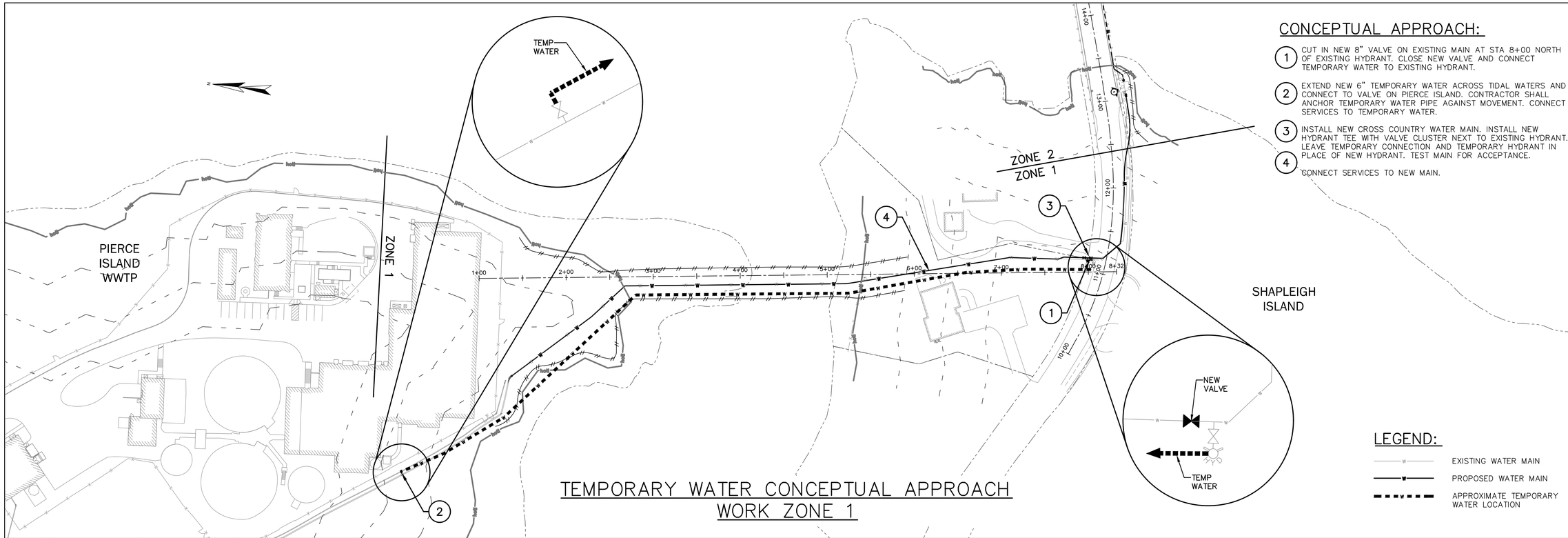

CONCEPTUAL APPROACH:

1. CUT IN NEW 8" VALVE ON EXISTING MAIN AT STA 8+00 NORTH OF EXISTING HYDRANT. CLOSE NEW VALVE AND CONNECT TEMPORARY WATER TO EXISTING HYDRANT.
2. EXTEND NEW 6" TEMPORARY WATER ACROSS TIDAL WATERS AND CONNECT TO VALVE ON PIERCE ISLAND. CONTRACTOR SHALL ANCHOR TEMPORARY WATER PIPE AGAINST MOVEMENT. CONNECT SERVICES TO TEMPORARY WATER.
3. INSTALL NEW CROSS COUNTRY WATER MAIN. INSTALL NEW HYDRANT TEE WITH VALVE CLUSTER NEXT TO EXISTING HYDRANT. LEAVE TEMPORARY CONNECTION AND TEMPORARY HYDRANT IN PLACE OF NEW HYDRANT. TEST MAIN FOR ACCEPTANCE.
4. CONNECT SERVICES TO NEW MAIN.

LEGEND:

- EXISTING WATER MAIN
- PROPOSED WATER MAIN
- APPROXIMATE TEMPORARY WATER LOCATION

TEMPORARY WATER CONCEPTUAL APPROACH
WORK ZONE 1

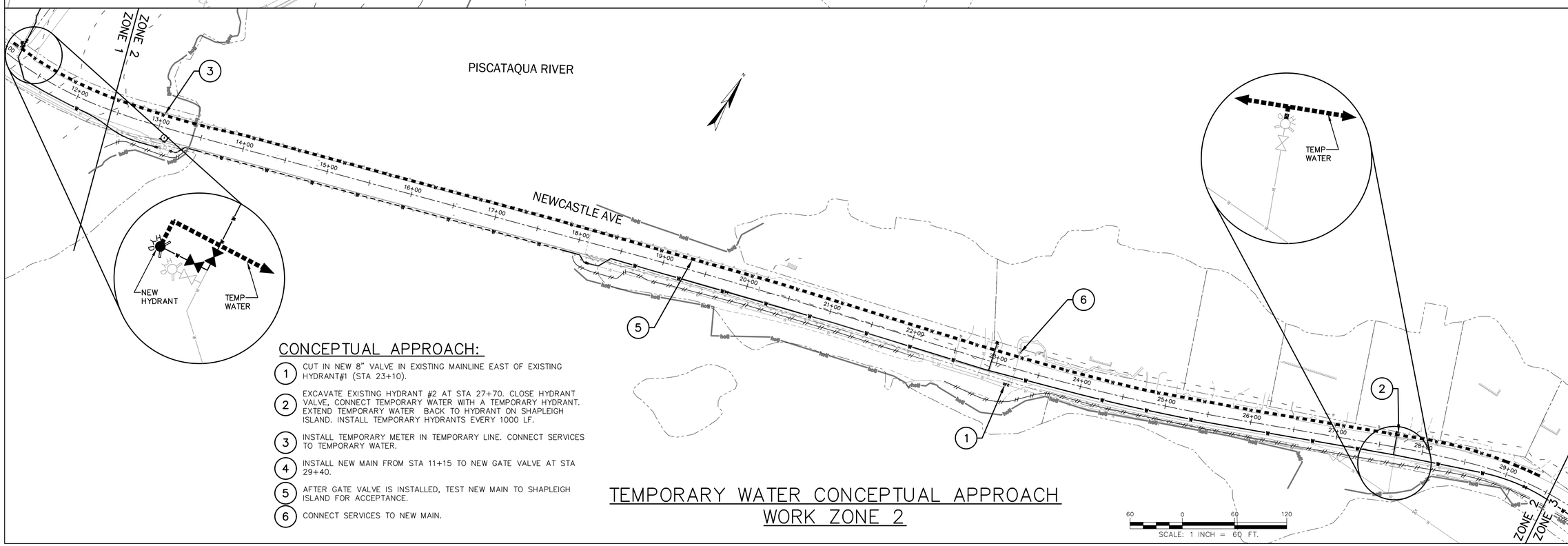

CONCEPTUAL APPROACH:

1. CUT IN NEW 8" VALVE IN EXISTING MAINLINE EAST OF EXISTING HYDRANT#1 (STA 23+10).
2. EXCAVATE EXISTING HYDRANT #2 AT STA 27+70. CLOSE HYDRANT VALVE, CONNECT TEMPORARY WATER WITH A TEMPORARY HYDRANT. EXTEND TEMPORARY WATER BACK TO HYDRANT ON SHAPLEIGH ISLAND. INSTALL TEMPORARY HYDRANTS EVERY 1000 LF.
3. INSTALL TEMPORARY METER IN TEMPORARY LINE. CONNECT SERVICES TO TEMPORARY WATER.
4. INSTALL NEW MAIN FROM STA 11+15 TO NEW GATE VALVE AT STA 29+40.
5. AFTER GATE VALVE IS INSTALLED, TEST NEW MAIN TO SHAPLEIGH ISLAND FOR ACCEPTANCE.
6. CONNECT SERVICES TO NEW MAIN.

TEMPORARY WATER CONCEPTUAL APPROACH
WORK ZONE 2

SCALE: 1 INCH = 60 FT.

ISSUE FOR	By	APP'D
APPROVAL Date 4/9/2019	RHR	
CONSTRUCTION Date –	By –	
RECORD DWG Date –	By –	

NO.	REVISIONS

Drawn/Chk RMG
Designed RHR
Checked –
Approved –
Date 3/25/2019
Book No.
Project No. 2331
Dwg. ID 2331_Index
Scale AS SHOWN

FOR APPROVAL
NOT FOR CONSTRUCTION

UNDERWOOD engineers
25 Vaughan Mall, Portsmouth, N.H. 03801
Tel. 603-436-6192 Fax. 603-431-4733

TEMPORARY WATER CONCEPTUAL APPROACH – ZONE 1 & 2

WATER TRANSMISSION MAIN IMPROVEMENTS PROJECT

TOWN OF NEW CASTLE
NEW CASTLE, NEW HAMPSHIRE

DWG NO C21

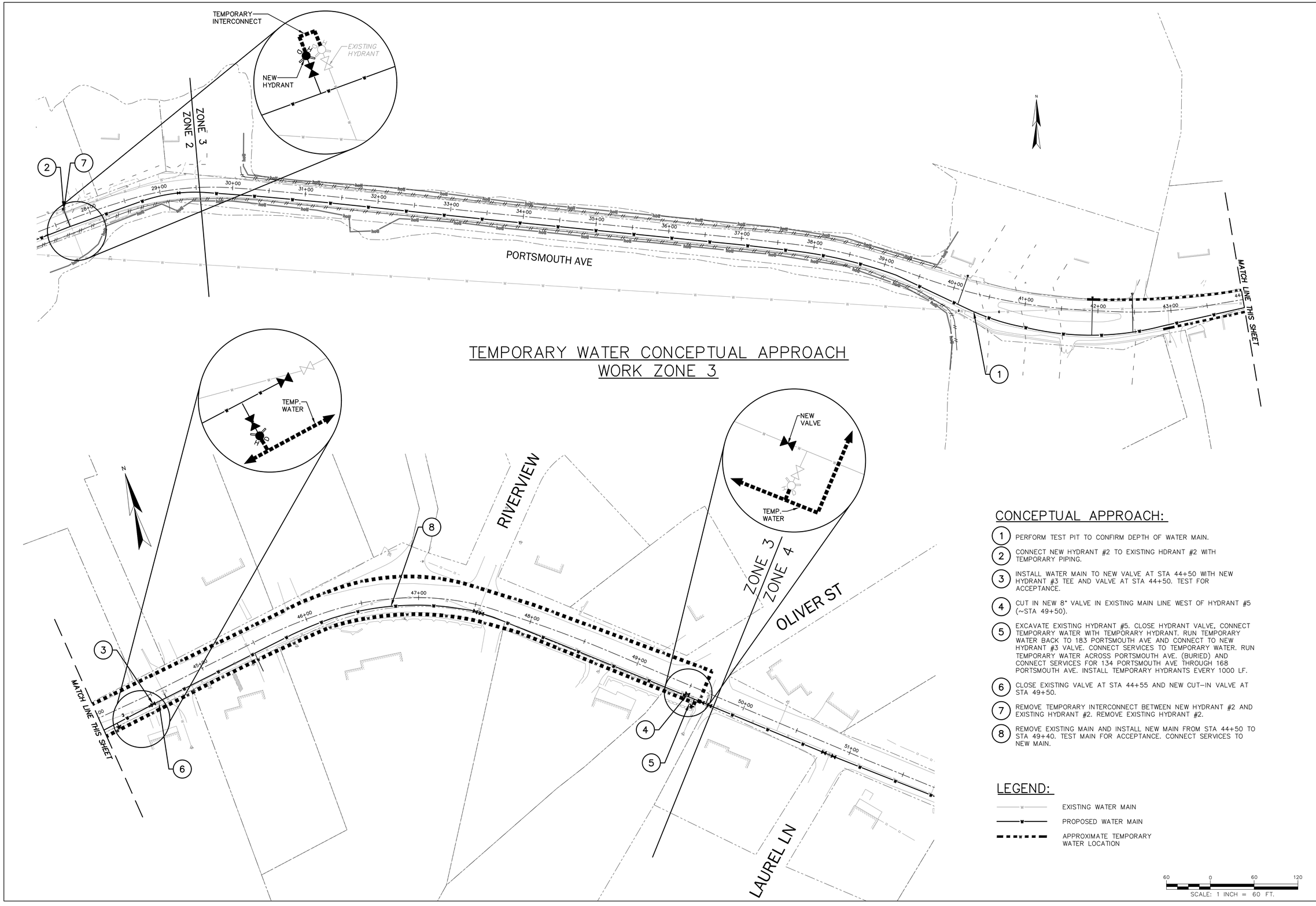

TEMPORARY WATER CONCEPTUAL APPROACH
WORK ZONE 3

CONCEPTUAL APPROACH:

1. PERFORM TEST PIT TO CONFIRM DEPTH OF WATER MAIN.
2. CONNECT NEW HYDRANT #2 TO EXISTING HDRANT #2 WITH TEMPORARY PIPING.
3. INSTALL WATER MAIN TO NEW VALVE AT STA 44+50 WITH NEW HYDRANT #3 TEE AND VALVE AT STA 44+50. TEST FOR ACCEPTANCE.
4. CUT IN NEW 8" VALVE IN EXISTING MAIN LINE WEST OF HYDRANT #5 (~STA 49+50).
5. EXCAVATE EXISTING HYDRANT #5. CLOSE HYDRANT VALVE, CONNECT TEMPORARY WATER WITH TEMPORARY HYDRANT. RUN TEMPORARY WATER BACK TO 183 PORTSMOUTH AVE AND CONNECT TO NEW HYDRANT #3 VALVE. CONNECT SERVICES TO TEMPORARY WATER. RUN TEMPORARY WATER ACROSS PORTSMOUTH AVE. (BURIED) AND CONNECT SERVICES FOR 134 PORTSMOUTH AVE THROUGH 168 PORTSMOUTH AVE. INSTALL TEMPORARY HYDRANTS EVERY 1000 LF.
6. CLOSE EXISTING VALVE AT STA 44+55 AND NEW CUT-IN VALVE AT STA 49+50.
7. REMOVE TEMPORARY INTERCONNECT BETWEEN NEW HYDRANT #2 AND EXISTING HYDRANT #2. REMOVE EXISTING HYDRANT #2.
8. REMOVE EXISTING MAIN AND INSTALL NEW MAIN FROM STA 44+50 TO STA 49+40. TEST MAIN FOR ACCEPTANCE. CONNECT SERVICES TO NEW MAIN.

LEGEND:

- EXISTING WATER MAIN
- PROPOSED WATER MAIN
- APPROXIMATE TEMPORARY WATER LOCATION

60 0 60 120
SCALE: 1 INCH = 60 FT.

ISSUE FOR		
APPROVAL	Date 4/9/2019	By RHR
CONSTRUCTION	Date –	By –
RECORD DWG	Date –	By –

NO.	REVISIONS	APP'D

Drawn/Chk RMG
Designed RHR
Checked –
Approved –
Date 3/25/2019
Book No.
Project No. 2331
Dwg. ID 2331_Index
Scale AS SHOWN

FOR APPROVAL
NOT FOR CONSTRUCTION

UNDERWOOD engineers
25 Vaughan Mall, Portsmouth, N.H. 03801
Tel. 603-436-6192 Fax. 603-431-4733

TEMPORARY WATER CONCEPTUAL APPROACH – ZONE 3
WATER TRANSMISSION MAIN IMPROVEMENTS PROJECT
TOWN OF NEW CASTLE
NEW CASTLE, NEW HAMPSHIRE

DWG NO C22
SHEET 26 OF 37

H:\Real Numbers\New Castle\2331 New Castle Water Main\design\drawings\2331_Phase_temp_water.dwg, C22, 4/9/2019 1:13:57 PM, mng

CONCEPTUAL APPROACH:

1. EXCAVATE EXISTING HYDRANT #17 AT STA 66+15. CLOSE HYDRANT VALVE, CONNECT TEMPORARY WATER WITH TEMPORARY HYDRANT.
2. EXTEND 6" TEMPORARY WATER ALONG NORTH SIDE OF PORTSMOUTH AVE TO OLIVER ST, RUN TEMPORARY WATER ACROSS PORTSMOUTH AVE. (BURIED) AND CONNECT TO NEW HYDRANT #5 VALVE. INSTALL TEMPORARY HYDRANTS EVERY 1000 LF.
3. EXTEND 6" TEMPORARY WATER LINE FROM NEW HYDRANT #5 ALONG SOUTH SIDE OF PORTSMOUTH AVE TO WALTON RD AND CONNECT TO HYDRANT #13 (1000 LF DOWN WALTON RD). CONNECT SERVICES ON PORTSMOUTH AVE TO TEMPORARY WATER.
4. EXTEND 6" TEMPORARY WATER FROM NEW HYDRANT #5 DOWN OLIVER STREET TO EXISTING HYDRANT #6 (~350LF).
5. CLOSE 8" BRANCH VALVE AT OLIVER STREET. CLOSE 8" BRANCH VALVE AT WALTON RD. CLOSE EXISTING 8" MAIN VALVE AT STA 60+95.
6. REMOVE EXISTING MAIN AND INSTALL NEW MAIN AND HYDRANTS FROM STA 49+40 TO NEW VALVE AT STA 60+90. TEST MAIN FOR ACCEPTANCE.
7. CONNECT BRANCHES AND SERVICES TO NEW MAIN.

LEGEND:

- EXISTING WATER MAIN
- PROPOSED WATER MAIN
- APPROXIMATE TEMPORARY WATER LOCATION

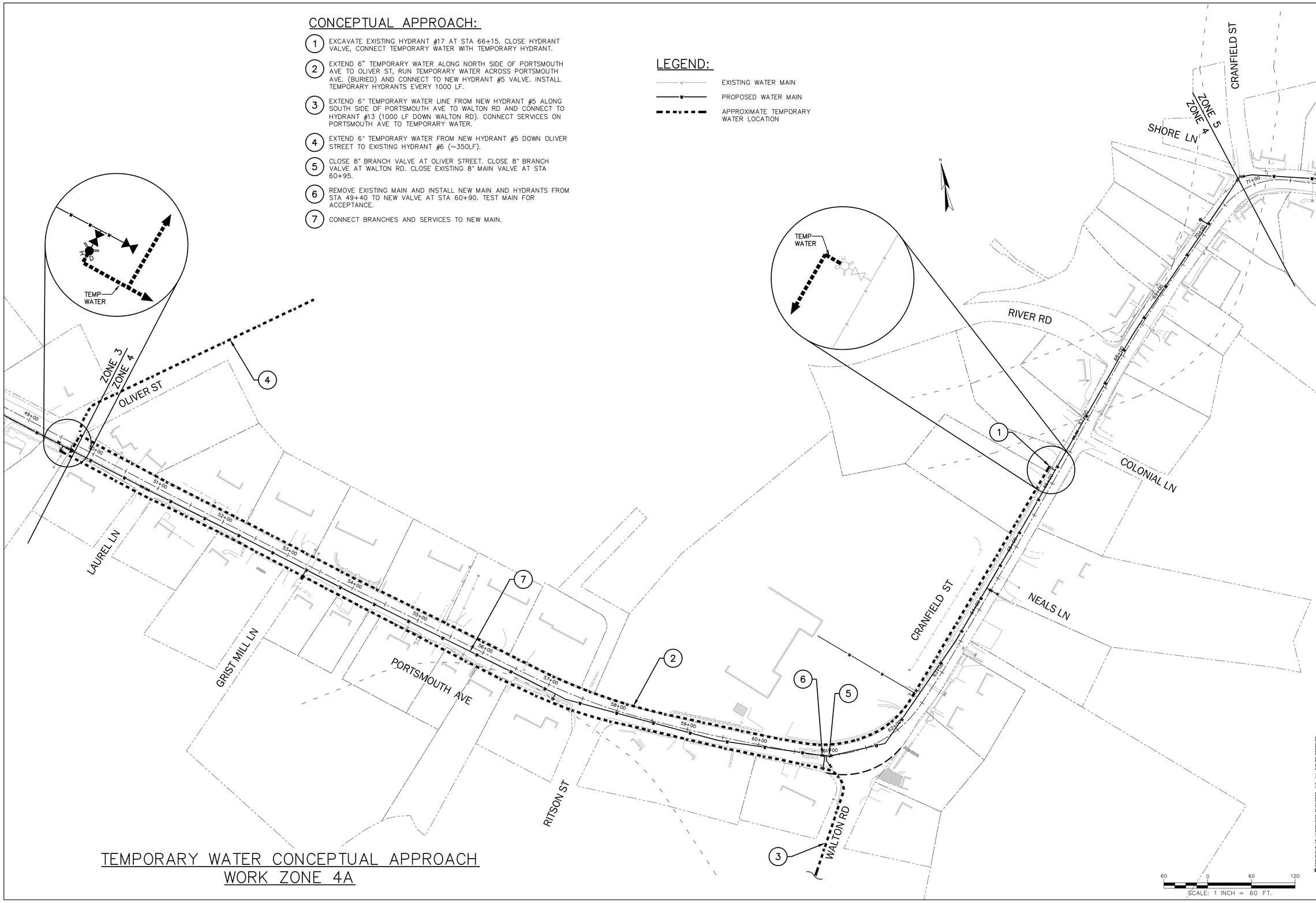

TEMPORARY WATER CONCEPTUAL APPROACH
WORK ZONE 4A

ISSUE FOR		By	APP'D
APPROVAL	Date 4/9/2019	RHR	
CONSTRUCTION	Date –	By –	
RECORD DWG	Date –	By –	

NO.	REVISIONS

Drawn/Chk RMG
Designed RHR
Checked –
Approved –
Date 3/25/2019
Book No.
Project No. 2331
Dwg. ID 2331_Index
Scale AS SHOWN

FOR APPROVAL
NOT FOR CONSTRUCTION

UNDERWOOD engineers
25 Vaughan Mall, Portsmouth, N.H. 03801
Tel. 603–436–6192 Fax. 603–431–4733

TEMPORARY WATER CONCEPTUAL APPROACH – ZONE 4A
WATER TRANSMISSION MAIN IMPROVEMENTS PROJECT
TOWN OF NEW CASTLE
NEW CASTLE, NEW HAMPSHIRE

DWG NO C23
SHEET 27 OF 37

H:\Real Numbers\New Castle\2331 New Castle Water Main\design drawings\2331_Phase_temp_water.dwg, C23, 4/9/2019 11:14:08 PM, rmg

CONCEPTUAL APPROACH:

1. EXCAVATE EXISTING HYDRANT #19 AT STA 73+60. CLOSE HYDRANT VALVE, CONNECT TEMPORARY WATER WITH TEMPORARY HYDRANT.
2. EXTEND 6" TEMPORARY WATER ACROSS MAIN STREET (BURIED) AND ALONG SOUTH SIDE OF MAIN STREET AND CRANFIELD ST TO WALTON RD AND CONNECT TO NEW HYDRANT #11 VALVE. EXTEND 6" TEMPORARY WATER LINE FROM NEW HYDRANT #11 ACROSS CRANFIELD STREET (BURIED) AND ALONG NORTH SIDE OF CRANFIELD ST TO SHORE LN. INSTALL TEMPORARY HYDRANTS EVERY 1000 LF. CONNECT SERVICES ON CRANFIELD ST TO TEMPORARY WATER.
3. CLOSE THREE EXISTING 8" VALVES AT CRANFIELD STREET/MAIN STREET INTERSECTION (STA 70+80).
4. REMOVE EXISTING MAIN AND INSTALL NEW MAIN AND HYDRANTS FROM STA 60+95 TO NEW VALVE AT STA 70+80. CONNECT NEW MAIN TO EXISTING 8" VALVE TO CRANFIELD RD. TEST MAIN FOR ACCEPTANCE.
5. CONNECT BRANCHES AND SERVICES TO NEW MAIN.

LEGEND:

- EXISTING WATER MAIN
- PROPOSED WATER MAIN
- APPROXIMATE TEMPORARY WATER LOCATION

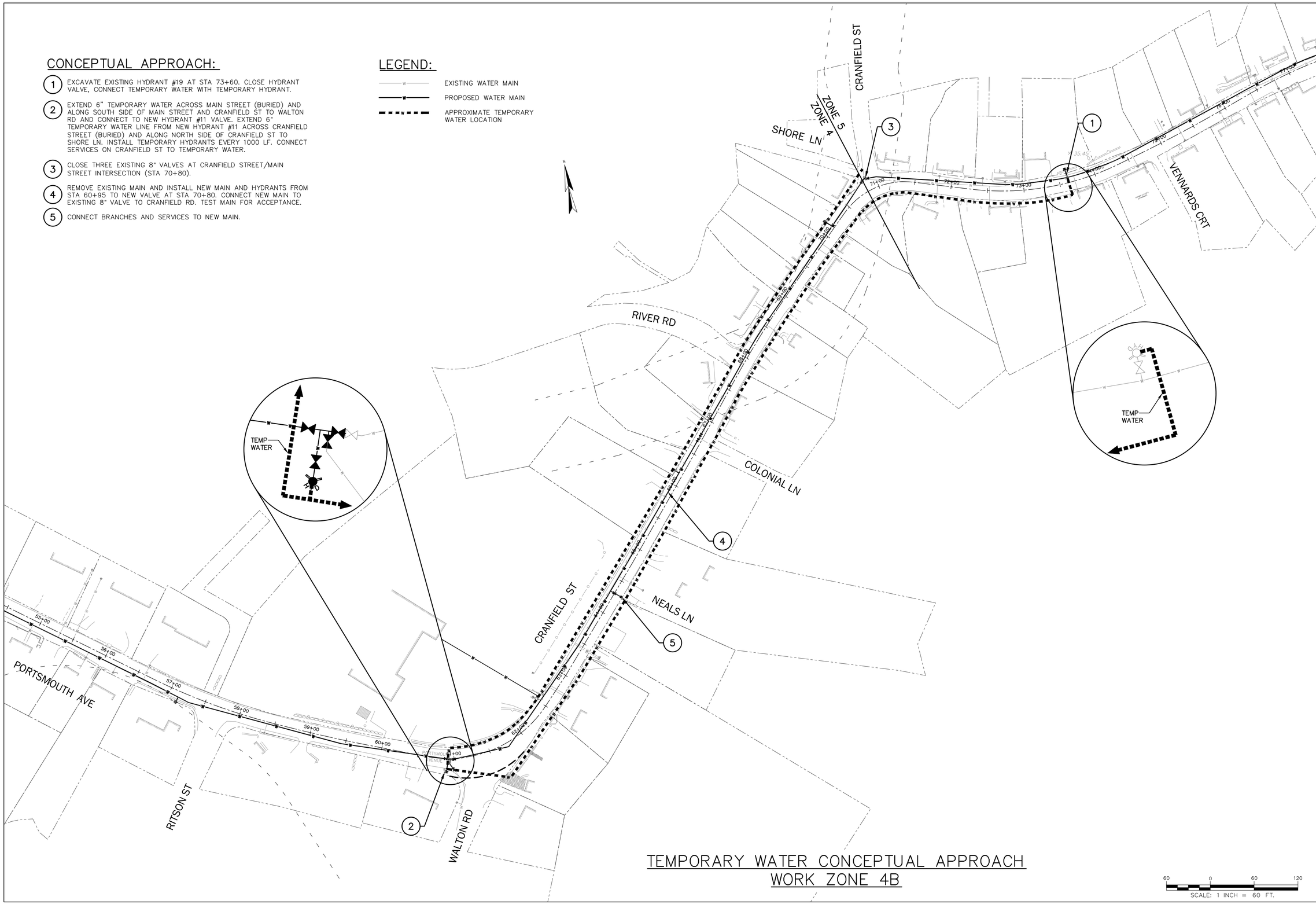

TEMPORARY WATER CONCEPTUAL APPROACH
WORK ZONE 4B

60 0 60 120
SCALE: 1 INCH = 60 FT.

ISSUE FOR		By
APPROVAL	Date 4/9/2019	RHR
CONSTRUCTION	Date –	By –
RECORD DWG	Date –	By –

NO.	REVISIONS	APP'D

Drawn/Chk RMG
Designed RHR
Checked –
Approved –
Date 3/25/2019
Book No.
Project No. 2331
Dwg. ID 2331_Index
Scale AS SHOWN

FOR APPROVAL
NOT FOR CONSTRUCTION

UNDERWOOD engineers
25 Vaughan Mall, Portsmouth, N.H. 03801
Tel. 603-436-6192 Fax. 603-431-4733

TEMPORARY WATER CONCEPTUAL APPROACH – ZONE 4B
WATER TRANSMISSION MAIN IMPROVEMENTS PROJECT
TOWN OF NEW CASTLE
NEW CASTLE, NEW HAMPSHIRE

DWG NO C24
SHEET 28 OF 37

H:\Real Numbers\New Castle\2331 New Castle Water Main\design drawings\2331_Phase_temp_water.dwg, C24, 4/9/2019 1:14:11 PM, rmg

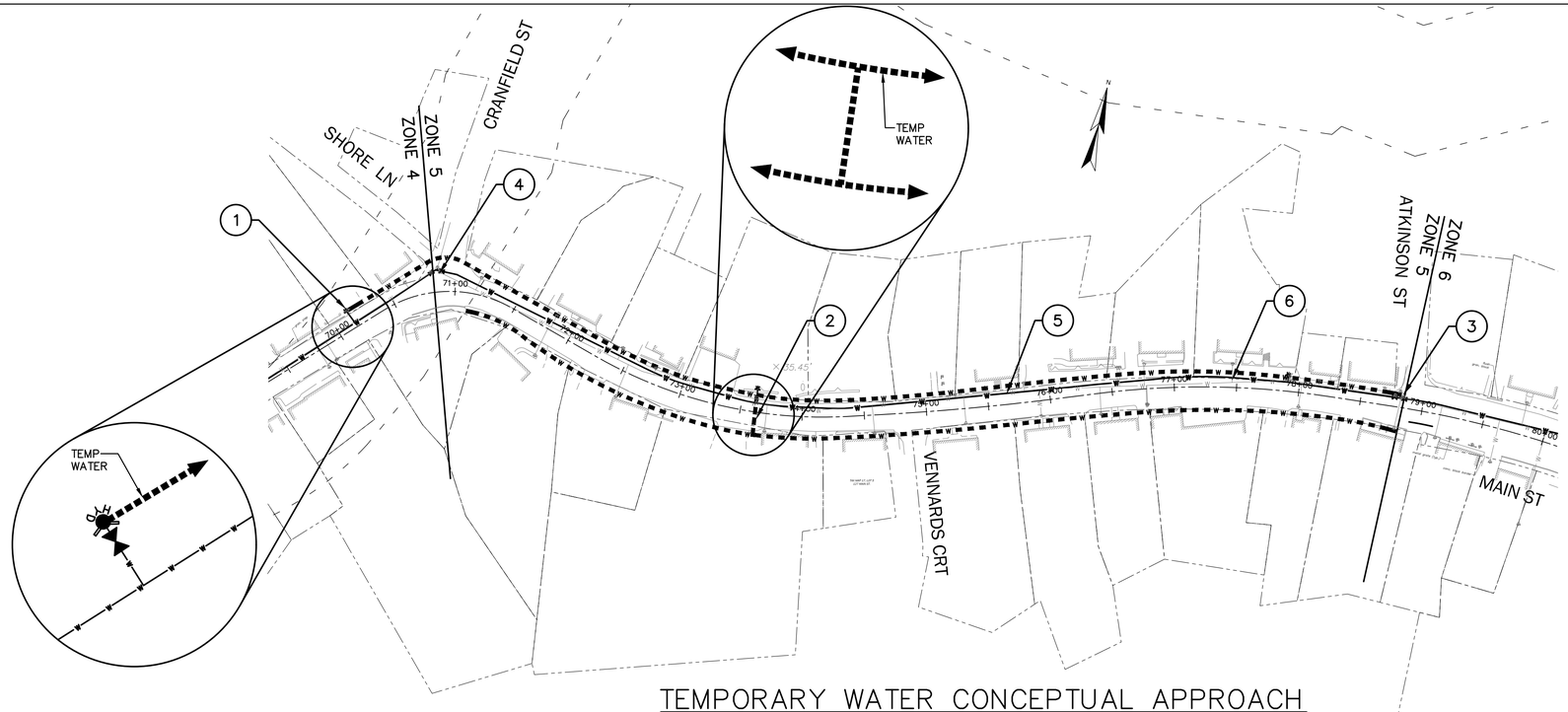

CONCEPTUAL APPROACH:

1. CONNECT TEMPORARY WATER TO NEW HYDRANT #18 AT STA 70+20 WITH TEMPORARY HYDRANT.
2. EXTEND 6" TEMPORARY WATER ALONG NORTH SIDE OF CRANFIELD AND MAIN STREET TO ATKINSON STREET. REUSING THE EXISTING TRENCH. AT STA 73+70, EXTEND 6" TEMPORARY WATER LINE ACROSS MAIN STREET (BURIED) AND ALONG SOUTH SIDE OF MAIN ST FROM 155 MAIN STREET TO 85 MAIN STREET. INSTALL TEMPORARY HYDRANTS EVERY 1000 LF. CONNECT SERVICES TO TEMPORARY WATER.
3. CLOSE THREE EXISTING 8" VALVES AT ATKINSON STREET.
4. IN A SINGLE OPERATION, EXPOSE VALVE CLUSTER AT CRANFIELD/MAIN STREET INTERSECTION, CLOSE ALL VALVES, INSTALL NEW 12"X12"X8" TEE AND NEW 12" GATE VALVE, AND REINSTATE FLOW ALONG CRANFIELD STREET.
5. REMOVE EXISTING MAIN AND INSTALL NEW MAIN AND HYDRANTS FROM STA 70+80 TO NEW VALVE AT STA 78+75 FOR ACCEPTANCE.
6. CONNECT SERVICES TO NEW MAIN.

LEGEND:

- EXISTING WATER MAIN
- PROPOSED WATER MAIN
- APPROXIMATE TEMPORARY WATER LOCATION

TEMPORARY WATER CONCEPTUAL APPROACH
WORK ZONE 5

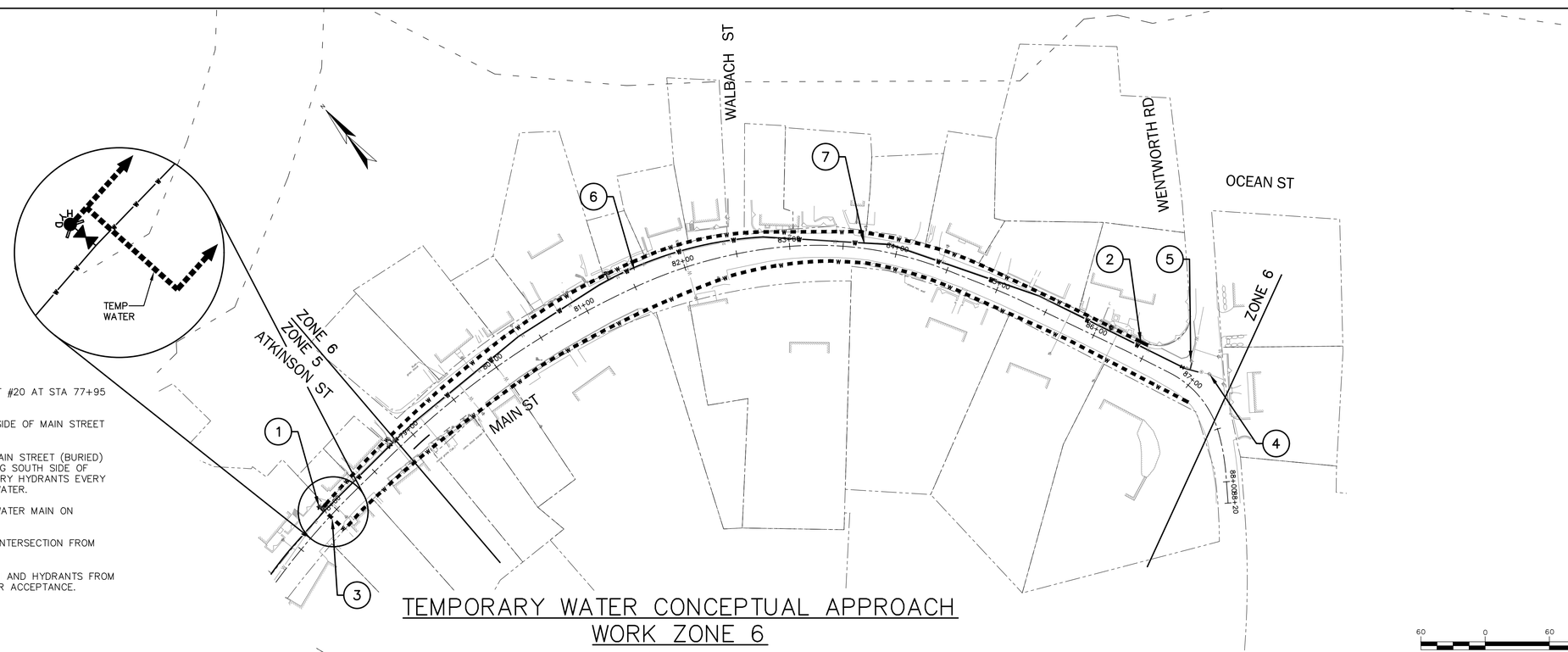

CONCEPTUAL APPROACH:

1. CONNECT TEMPORARY WATER TO NEW HYDRANT #20 AT STA 77+95 WITH TEMPORARY HYDRANT.
2. EXTEND 6" TEMPORARY WATER ALONG NORTH SIDE OF MAIN STREET TO 8 MAIN ST.
3. EXTEND 6" TEMPORARY WATER LINE ACROSS MAIN STREET (BURIED) FROM HYDRANT #20 AT STA 77+95 AND ALONG SOUTH SIDE OF MAIN ST TO 3 MAIN STREET. INSTALL TEMPORARY HYDRANTS EVERY 1000 LF. CONNECT SERVICES TO TEMPORARY WATER.
4. CLOSE TWO EXISTING 8" VALVES CONNECTING WATER MAIN ON WENTWORTH ROAD TO MAIN STREET.
5. CLOSE EXISTING 8" VALVE AT WENTWORTH RD INTERSECTION FROM WENTWORTH RD NORTH/WALBACH STREET.
6. REMOVE EXISTING MAIN AND INSTALL NEW MAIN AND HYDRANTS FROM STA 78+75 TO WENTWORTH RD. TEST MAIN FOR ACCEPTANCE.
7. CONNECT SERVICES TO NEW MAIN.

TEMPORARY WATER CONCEPTUAL APPROACH
WORK ZONE 6

60 0 60 120
SCALE: 1 INCH = 60 FT.

ISSUE FOR	By	APP'D
APPROVAL Date 4/9/2019	RHR	
CONSTRUCTION Date –	By –	
RECORD DWG Date –	By –	

NO.	REVISIONS

Drawn/Chk RMG
Designed RHR
Checked –
Approved –
Date 3/25/2019
Book No.
Project No. 2331
Dwg. ID 2331_Index
Scale AS SHOWN

FOR APPROVAL
NOT FOR CONSTRUCTION

UNDERWOOD engineers
25 Vaughan Mall, Portsmouth, N.H. 03801
Tel. 603-436-6192 Fax. 603-431-4733

TEMPORARY WATER CONCEPTUAL APPROACH – ZONE 5 & 6

WATER TRANSMISSION MAIN IMPROVEMENTS PROJECT

TOWN OF NEW CASTLE
NEW CASTLE, NEW HAMPSHIRE

DWG NO C25

SHEET 29 OF 37

H:\Real Numbers\New Castle\2331 New Castle Water Main\design drawings\2331_Phase_temp_water.dwg, C25, 4/9/2019 1:14:21 PM, rmg

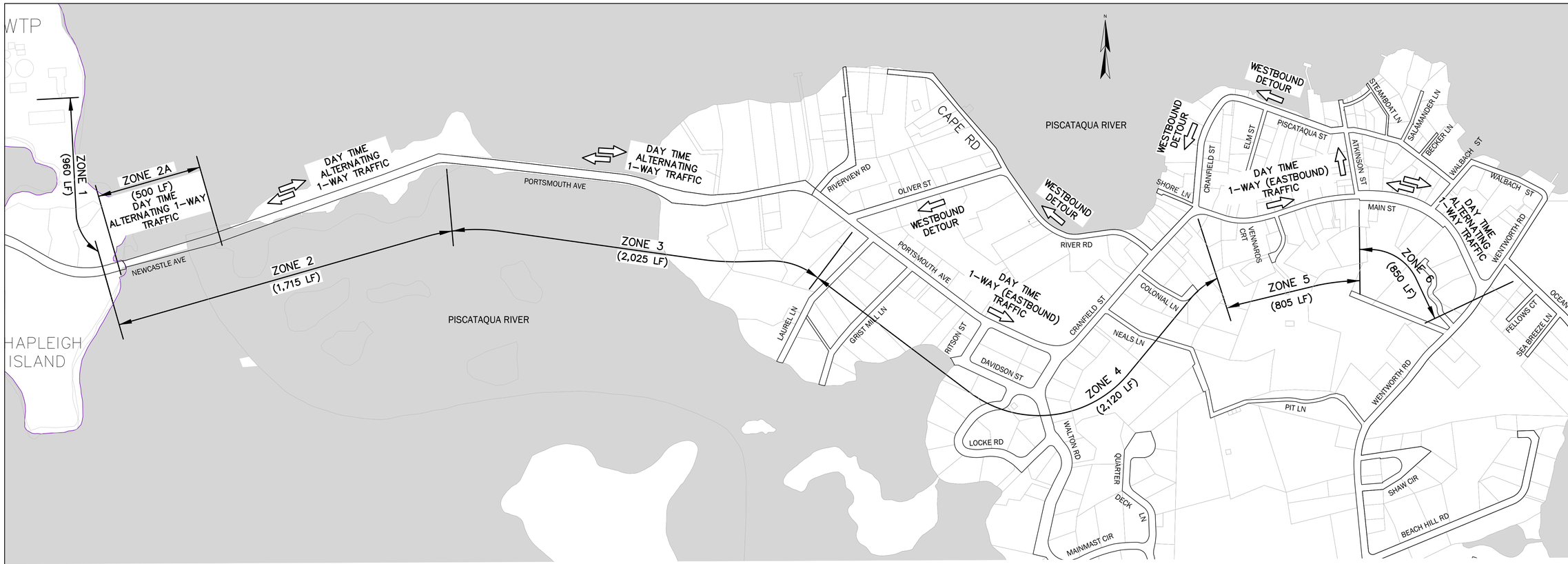

MAINTENANCE OF TRAFFIC & GENERAL NOTES:

1. CONTRACTOR IS REQUIRED TO SUBMIT A TRAFFIC CONTROL PLAN FOR EACH WORK ZONE, FOR REVIEW AND APPROVAL BY TOWN AND ENGINEER. THE ENGINEER AND/OR THE TOWN RESERVES THE RIGHT TO REQUEST MODIFICATIONS, DEEMED REASONABLE AND NECESSARY FOR THE SAFE CONTINUOUS FLOW OF TRAFFIC THROUGHOUT THE PROJECT AREA. SEE CONTRACT SPECIFICATIONS FOR ADDITIONAL REQUIREMENTS.
2. CONTRACTOR SHALL ONLY WORK IN ONE WORK ZONE AT A TIME & SHALL MAINTAIN TRAFFIC IN EITHER DIRECTION WITH ACCESS TO BUSINESSES & RESIDENTS. WATER UTILITY WORK SHALL BE COMPLETED WITHIN EACH WORK ZONE PRIOR TO MOVING TO THE NEXT ZONE.
3. WORK ZONE GENERAL REQUIREMENTS ARE PROVIDED ON DRAWINGS __ TO __. THE CONTRACTOR WILL BE RESPONSIBLE TO MAINTAIN TRAFFIC IN ACCORDANCE WITH THESE REQUIREMENTS AND PROCESS SPECIFICATIONS,. AS PROVIDED IN THIS CONTRACT DOCUMENTS, THROUGHOUT THE COURSE OF OF CONSTRUCTION.
4. CONTRACTOR SHALL ERECT DAILY USE SIGNS IN THE MORNING PRIOR TO WORK BEGINNING AND REMOVE ALL DAILY USE SIGNS AT THE END OF EACH DAY.
5. DAILY USAGE SIGNS SHALL INCLUDE SIGNAGE NECESSARY TO ENSURE THE SAFETY OF THE PUBLIC (I.E. ROAD CLOSED, FLAGGER AHEAD, ONE LANE TRAFFIC, ETC).
6. TYPICAL SIGN DETAILS ARE BASED ON THE MANUAL ON UNIFORM TRAFFIC CONTROL DEVICES (MUTCD) AND IS NOT INTENDED AS AN ALL-INCLUSIVE LIST. ALL SIGNAGE AND OTHER TRAFFIC CONTROL DEVICES SHALL CONFORM TO THE MUTCD (LATEST EDITION) AND NHDOT REQUIREMENTS.
7. ALL SIGNS SHALL BE ERECTED AND PLACED IN ACCORDANCE WITH MUTCD (LATEST EDITION).
8. TRENCH PAVEMENT SHALL BE PLACED UPON COMPLETION OF WATER MAIN INSTALLATION WITHIN EACH WORK ZONE.
9. TRENCH PAVEMENT SHALL ALSO BE PLACED UPON COMPLETION OF EACH SERVICE WITHIN EACH ZONE.
10. CONTRACTOR SHALL NOTE THAT ROUTE 1B THOUGH THE PROJECT IS THE ONLY ACCESS FOR TRACTOR TRAILER TRUCKS TO THE WENTWORTH HOTEL. ALL TEMPORARY TRAFFIC PATTERNS SHALL ENSURE THAT ACCESS IS MAINTAINED IN BOTH DIRECTIONS FOR TRAILER TRUCKS.
11. CONTRACTOR SHALL MAINTAIN 1 WAY ALTERNATING TRAFFIC FOR ALL WORK ZONES UNLESS OTHERWISE NOTED OR APPROVED IN WRITING BY OWNER & ENGINEER. CONTRACTOR SHALL RESTORE 2 WAY TRAFFIC OVER BACK FILLED TRENCH EVERY NIGHT AFTER WORK IS COMPLETED.
12. 1 WAY DETOURS SHALL BE ALLOWED WHERE INDICATED HOWEVER FLAGGERS SHALL BE MAINTAINED TO ALLOW TRUCK PASSAGE ON ROUTE 1B AS NECESSARY.
13. CONTRACTOR SHALL OBTAIN TOWN APPROVAL BEFORE IMPLEMENTING DETOURS OR OTHER TRAFFIC PATTERN MODIFICATIONS.

AVERAGE SUMMER DAILY TRAFFIC FLOWS

- ROUTE 1B (1-WAY) = 1,600 VEHICLES/DAY
  TRUCKS = 20/DAY

TYPICAL TRAFFIC CONTROL SIGNS

DAILY SIGNS

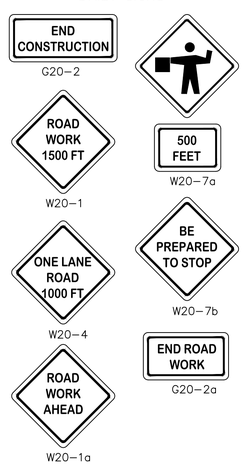

TEMPORARY DETOUR SIGNS

250 0 250 500
SCALE: 1 INCH = 250 FT.

TRAFFIC CONTROL APPROACH

	ZONE 1	ZONE 2	ZONE 3	ZONE 4	ZONE 5	ZONE 6
LENGTH	960 LF	1,715 LF	2,025 LF	2,120 LF	850 LF	850 LF
SUMMER TRAFFIC COUNT	1,600/DAY	1,600/DAY	1,600/DAY	1,600/DAY	1,600/DAY	1,600/DAY
TRUCK COUNT	20/DAY	20/DAY	20/DAY	20/DAY	20/DAY	20/DAY
TRAFFIC REQUIREMENTS	• Maintain alternating 1-way traffic on Route 1B during the day. • Restore 2-way traffic on Route 1B at night. • Maintain residential access to homes and commercial access to Lobster Pound at all times.	• Maintain alternating 1-way traffic on Route 1B during the day. • Restore 2-way traffic on Route 1B at night. • Maintain residential access to homes	• Maintain alternating 1-way traffic on Route 1B during the day. • Restore 2-way traffic on Route 1B at night. • Maintain residential access to homes	• Maintain 1-way traffic on Route 1B during the day, with 1-way detour on Oliver St. and River Rd. • Flaggers shall be maintained to allow truck passage on Route 1B (both directions) • Restore 2-way traffic on Route 1B at night. • Maintain residential access to homes • Police officers shall be used for traffic control during work at the Cranfield St./Portsmouth Ave. intersection. • 1-way traffic to be detoured through school parking lot during work at the Cranfield St/Portsmouth Ave intersection.	• Maintain 1-way traffic on Route 1B during the day, with 1-way detour on Atkinson St. and Piscataqua St. • Flaggers shall be maintained to allow truck passage on Route 1B (both directions) • Restore 2-way traffic on Route 1B at night. • Maintain residential access to homes • Police officers shall be used for traffic control during work at the Cranfield St./Main St. Intersection.	• Maintain alternating 1-way traffic on Route 1B during the day. • Restore 2-way traffic on Route 1B at night. • Maintain access to homes and businesses. • On-street parking to be eliminated during Zone 6 construction. Provide signs for public parking in Town Hall lot. • Police officers shall be used for traffic control during work at the Main St./Wentworth Rd. Intersection.
CONDITIONS	• Contractor shall coordinate with NHDOT Bridge restoration project. • Contractor shall complete Zone before beginning next zone.	• Contractor shall coordinate with NHDOT Bridge restoration project. • Contractor shall complete Zone before beginning next zone.	• Contractor shall complete Zone before beginning next zone.	• Contractor shall complete Zone before beginning next zone. • Work at the Cranfield St./Portsmouth Ave. intersection shall occur outside of school operation.	• Contractor shall complete Zone before beginning next zone.	

ISSUE FOR		By	APP'D
APPROVAL	4/9/2019	RHR	
CONSTRUCTION			
RECORD DWG			

NO.	REVISIONS

Drawn/Chk RMG
Designed RHR
Checked –
Approved –
Date 3/25/2019
Book No. 2331
Project No. 2331
Dwg. ID 2331_Index
Scale AS SHOWN

FOR APPROVAL
NOT FOR CONSTRUCTION

UNDERWOOD engineers
25 Vaughan Mall, Portsmouth, N.H. 03801
Tel. 603-436-6192 Fax. 603-431-4733

TRAFFIC CONTROL OVERVIEW PLAN

WATER TRANSMISSION MAIN IMPROVEMENTS PROJECT

TOWN OF NEW CASTLE
NEW CASTLE, NEW HAMPSHIRE

DWG NO T1

RECOMMENDED ADVANCE WARNING SIGN MINIMUM SPACING TABLE 6-1C FROM MUTCD (2009 EDITION)			
ROAD TYPE	DISTANCE BETWEEN SIGNS		
	A	B	C
URBAN (≤ 30 MPH)	100′	100′	100′
URBAN (≥ 35 MPH)	350′	350′	350′
RURAL	500′	500′	500′
EXPRESSWAY / FREEWAY	1000′	1500′	2640′

TYPICAL APPLICATION

LANE CLOSURE: TWO-LANE ROAD WITH LOW TRAFFIC VOLUMES

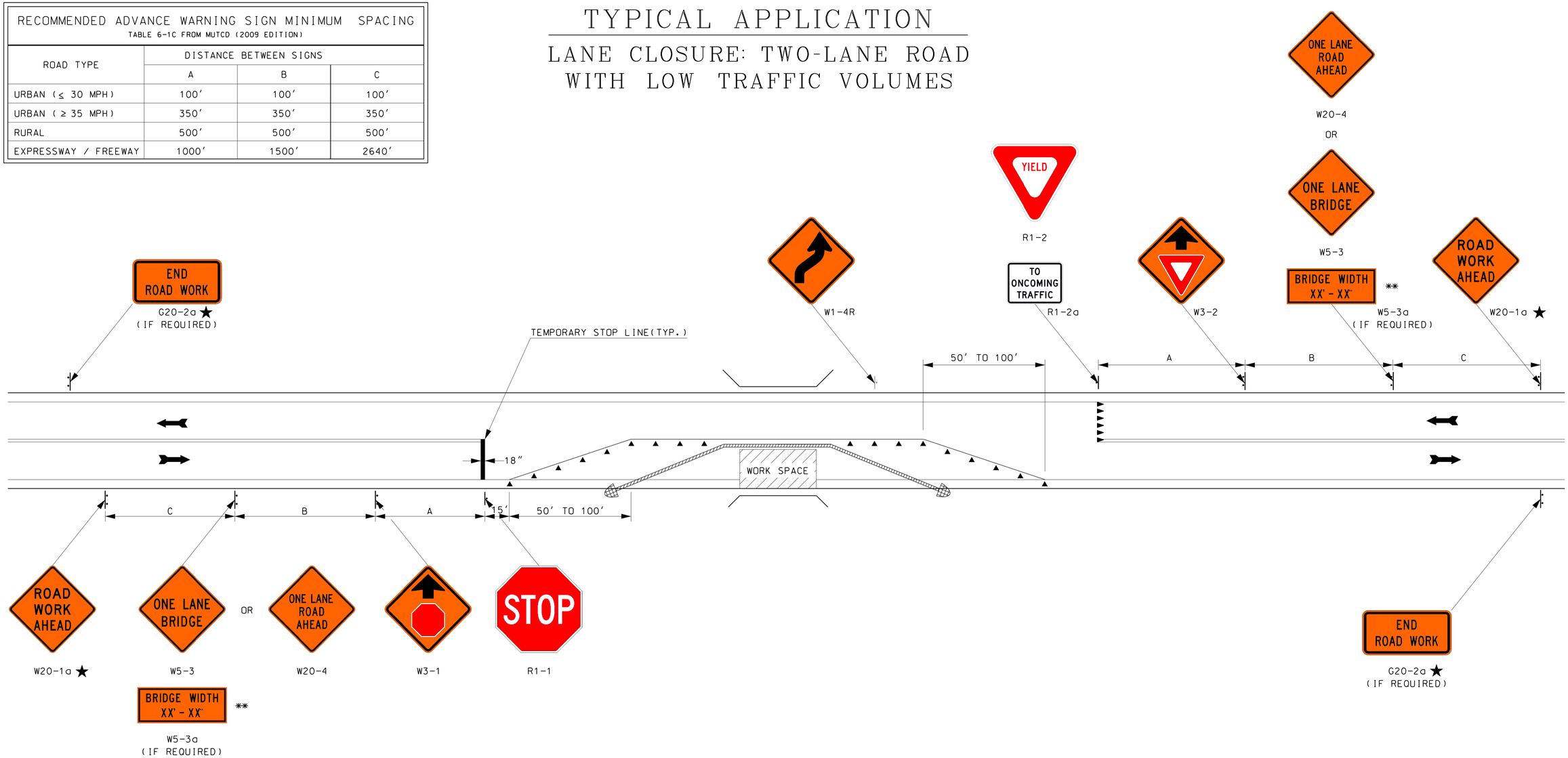

LEGEND

- PORTABLE BARRIER
- CHANNELIZING DEVICES
- IMPACT ATTENUATOR
- YIELD LINES

GENERAL NOTES

★ SEE AMENDMENT NO. 10 ON TC-1

** POSTED BRIDGE WIDTH SHALL BE 1 FOOT LESS THAN ACTUAL WIDTH.

1. THIS TYPICAL APPLICATION SHOULD BE USED AS AN ALTERNATE TO MUTCD FIGURE TA-11 WHEN CONSTRUCTION ACTIVITIES ARE FOR A PERIOD LONGER THAN THAT CONSIDERED INTERMEDIATE-TERM WORK (SEE MUTCD SECTION 6G.02).
2. EXISTING PAVEMENT MARKINGS SHALL BE REMOVED AND TEMPORARY MARKINGS INSTALLED AS ORDERED.
3. REGULATORY SIGN PLACEMENT SHALL BE APPROVED BY BUREAU OF TRAFFIC.
4. HAZARD IDENTIFICATION BEACONS OR TYPE A FLASHING WARNING LIGHTS MAY BE MOUNTED WITH WARNING SIGNS, IF WARRANTED.
5. THE USE OF BARRIER IS ANTICIPATED FOR MOST SITUATIONS REQUIRING APPLICATION OF THIS LANE CLOSURE. REQUIRED BARRIER PROTECTION SHALL BE DETERMINED AS DESCRIBED IN THE MOST CURRENT EDITION OF THE ROADSIDE DESIGN GUIDE AS ADOPTED BY THE DEPARTMENT TAPER RATES FOR BARRIER ARE FOUND ON THE PORTABLE CONCRETE BARRIER STANDARD (GR-23).
6. CRASH CUSHIONS SHALL BE DELINEATED WITH TYPE 3 OBJECT MARKERS. SEE MUTCD FIGURE 2C-13.

NOT TO SCALE

STATE OF NEW HAMPSHIRE
SPECIAL DETAILS
DEPARTMENT OF TRANSPORTATION ∘ BUREAU OF HIGHWAY DESIGN

LANE CLOSURE: TWO-LANE ROAD WITH LOW TRAFFIC VOLUMES

REVISION DATE	DGN	STATE PROJECT NO.	SHEET NO.	TOTAL SHEETS
03-16-17	twlnrd-lowvol	_	3	12

TYPICAL APPLICATION
PERMANENT CONSTRUCTION SIGNING

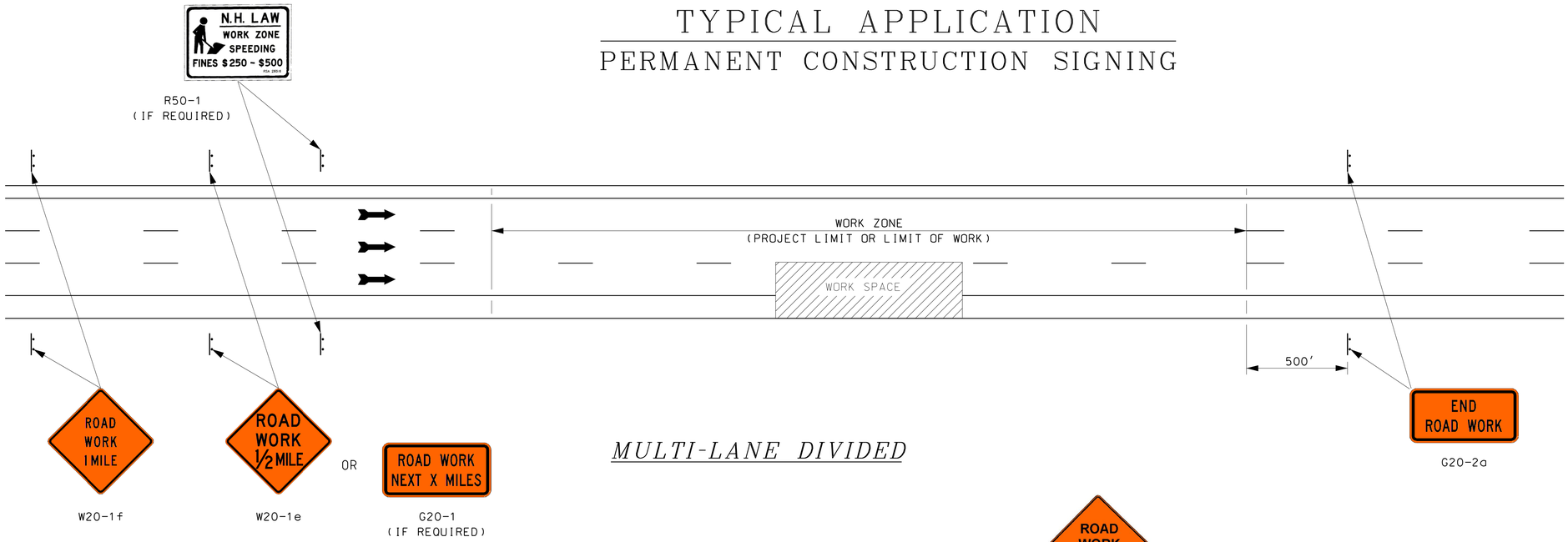

MULTI-LANE DIVIDED

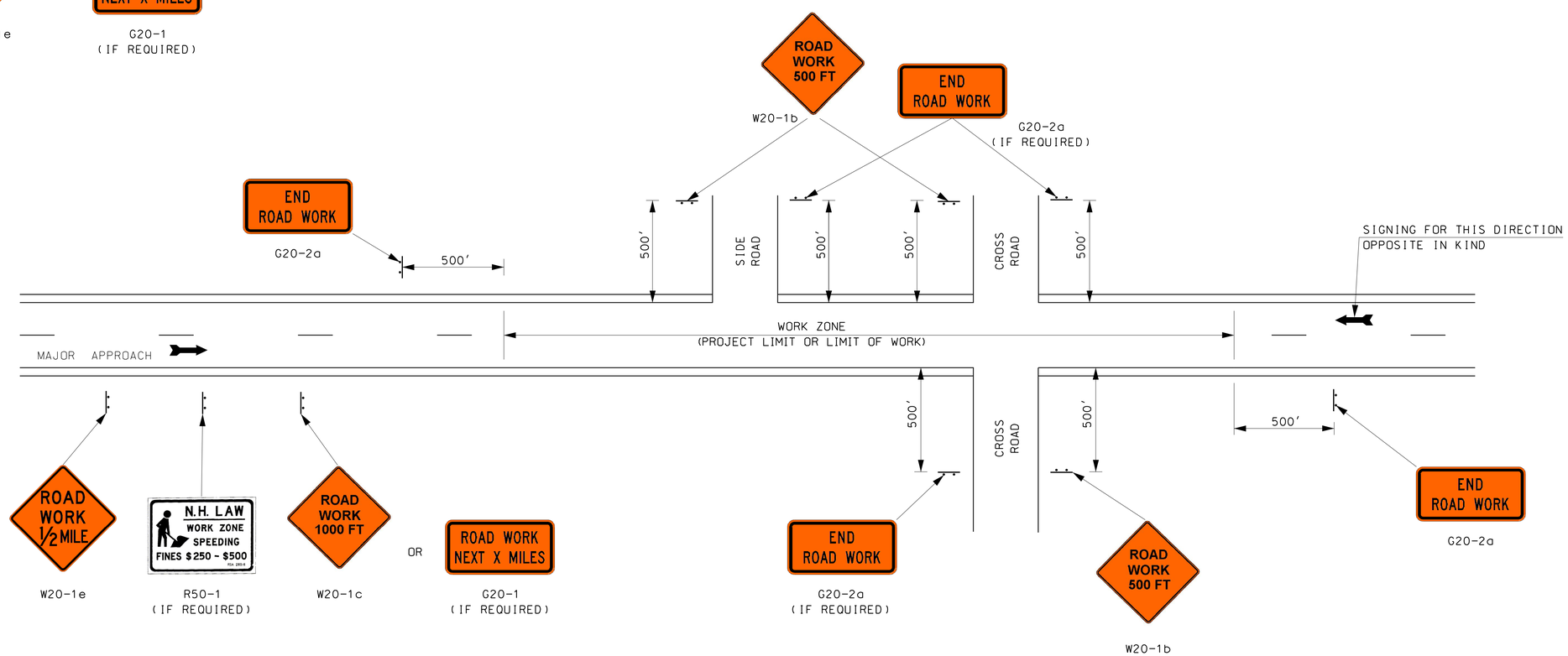

TWO LANE UNDIVIDED

GENERAL NOTES

1. SIGNS SHOWN INDICATE TYPICAL INSTALLATIONS. ACTUAL NUMBER OF SIGNS MAY VARY TO FIT INDIVIDUAL PROJECT NEEDS.
2. CONSTRUCTION SIGNS SHOWN ON THIS SHEET SHALL BE FLUORESCENT ORANGE. WITH THE EXCEPTION OF R50-1 AND G20-2a.
3. REFER TO TYPICAL APPLICATIONS FOR SIGNING OF INTERMEDIATE WORK AREAS.

NOT TO SCALE

WORK ZONE TRAFFIC CONTROL

PERMANENT CONSTRUCTION SIGNING

STANDARD NO. TC-3

REVISION DATE
08/03/2004
03/16/2017

*.DGN FILE NAME
TC-3

STANDARD PLANS

New Hampshire DOT Department of Transportation

STANDARD NO. TC-3

TYPICAL APPLICATION
TWO WAY TRAFFIC LANE SHIFT

RECOMMENDED ADVANCE WARNING SIGN MINIMUM SPACING TABLE 6-1C FROM MUTCD (2009 EDITION)			
ROAD TYPE	DISTANCE BETWEEN SIGNS		
	A	B	C
URBAN (≤ 30 MPH)	100′	100′	100′
URBAN (≥ 35 MPH)	350′	350′	350′
RURAL	500′	500′	500′
EXPRESSWAY / FREEWAY	1000′	1500′	2640′

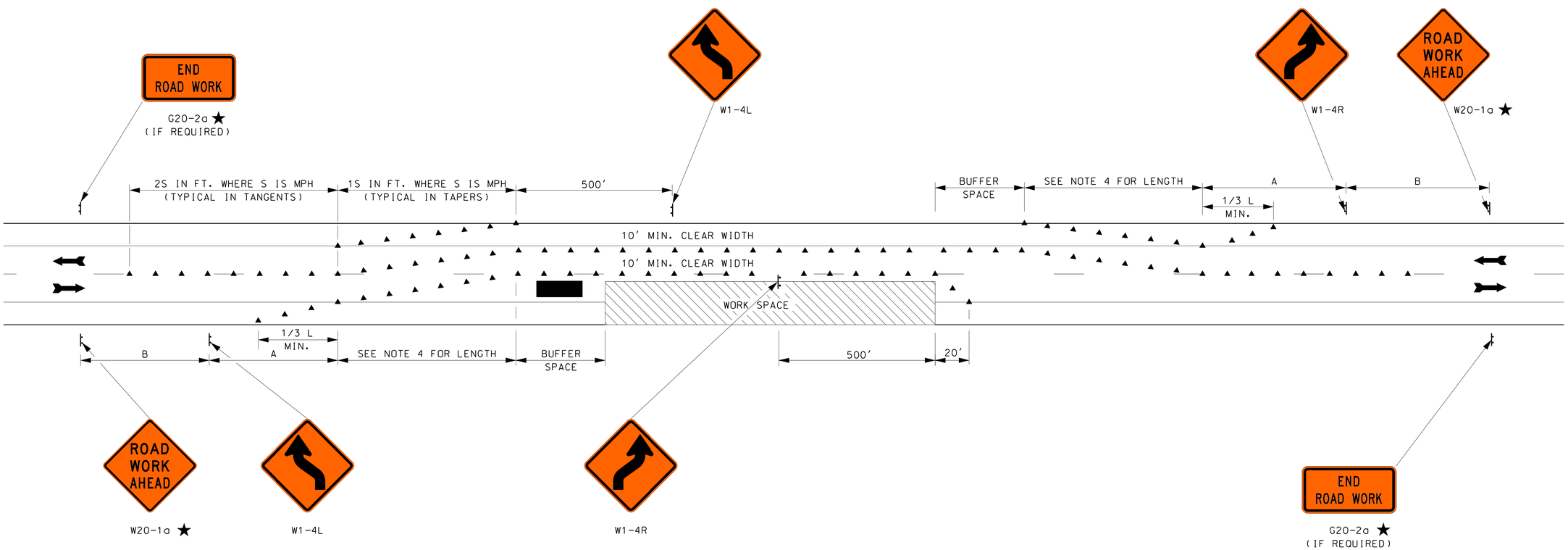

GENERAL NOTES

★ SEE AMENDMENT NO. 10 ON TC-1.

1. FOR OPERATIONS WHERE TWO-WAY TRAFFIC LANE SHIFT CAN BE MAINTAINED ON TWO 10′ MIN. CLEAR WIDTH LANES.
2. FOR LONG-TERM STATIONARY OR INTERMEDIATE-TERM STATIONARY WORK, PAVEMENT MARKINGS INDICATING NO PASSING SHALL BE USED. DO NOT PASS SIGNS (R4-1) MAY BE REQUIRED.
3. FOR TAPER LENGTH (L) CRITERIA, SEE MUTCD TABLES 6C-3 AND 6C-4.
4. FOR SPEEDS > 50 MPH, LENGTH = L. FOR SPEEDS ≤ 50 MPH LENGTH = 1/2L.
5. FOR BUFFER SPACE CRITERIA, SEE STOPPING SIGHT DISTANCE, MUTCD TABLE 6C-2.

NOT TO SCALE

LEGEND

▲ CHANNELIZING DEVICES

▬ TMA (SEE TC-1, NOTE 9)

WORK ZONE TRAFFIC CONTROL

TWO WAY TRAFFIC LANE SHIFT

STANDARD NO. TC-4

REVISION DATE
08/03/2004
03/16/2017

*.DGN FILE NAME
TC-4

STANDARD PLANS

New Hampshire DOT Department of Transportation

STANDARD NO. TC-4

TYPICAL APPLICATION

LANE CLOSURE: SIGNALIZED CONTROL WITH BARRIER

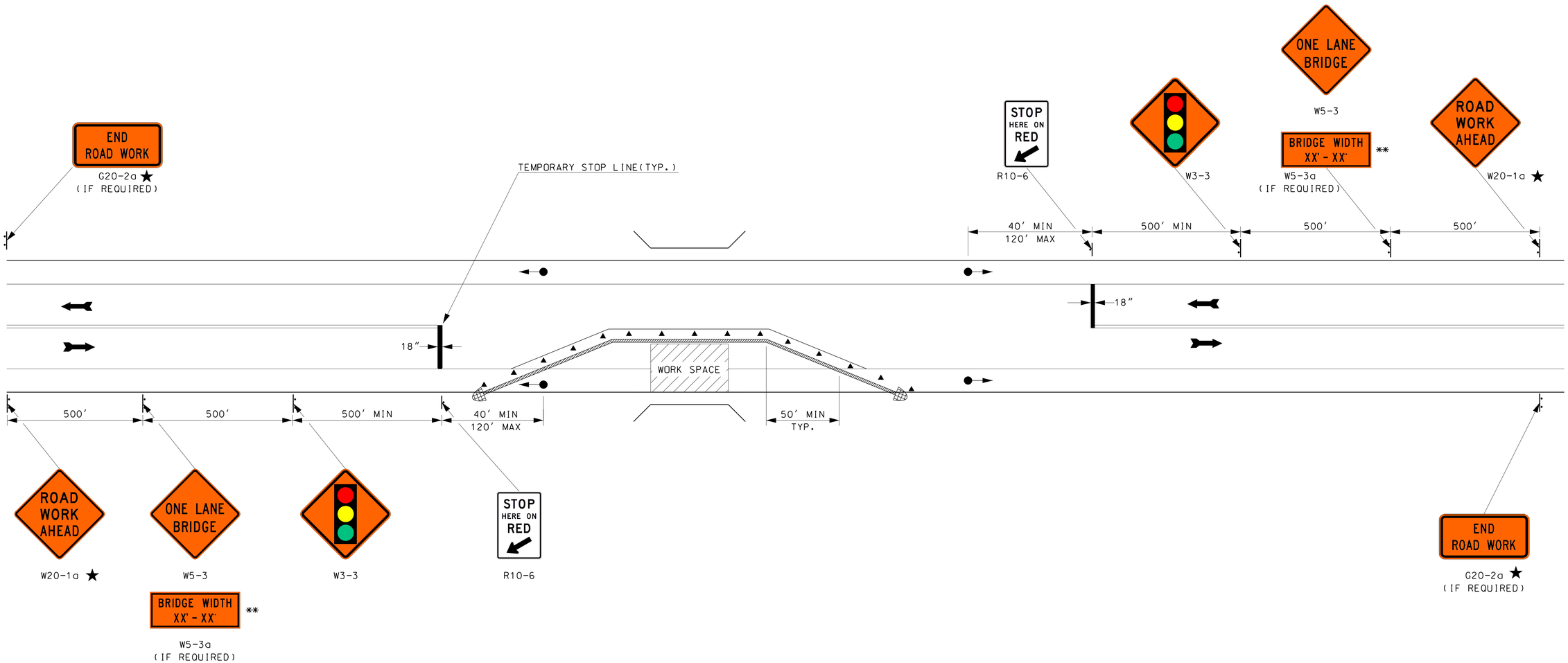

GENERAL NOTES

★ SEE AMENDMENT NO. 10 ON TC-1.

** POSTED BRIDGE WIDTH SHALL BE 1 FOOT LESS THAN ACTUAL WIDTH.

1. TEMPORARY TRAFFIC SIGNALS ARE PREFERABLE TO FLAGGERS FOR LONG-TERM PROJECTS AND OTHER ACTIVITIES THAT WOULD REQUIRE FLAGGERS AT NIGHT.
2. THE MAXIMUM LENGTH OF THE ACTIVITY AREA FOR ONE-WAY TRAFFIC SIGNAL CONTROL IS DETERMINED BY THE CAPACITY REQUIRED TO HANDLE THE PEAK HOUR DEMAND. SIGNAL TIMING SHALL BE ESTABLISHED BY QUALIFIED PERSONNEL.
3. SIGNALS SHALL BE INSTALLED AND OPERATED IN ACCORDANCE WITH THE REQUIREMENTS OF PART IV OF THE MUTCD. TEMPORARY TRAFFIC CONTROL SHALL MEET THE PHYSICAL DISPLAY AND OPERATIONAL REQUIREMENTS OF CONVENTIONAL TRAFFIC SIGNALS.
4. ADEQUATE AREA ILLUMINATION SHALL BE PROVIDED TO CLEARLY IDENTIFY THE TRANSITION AREAS AT NIGHT FOR LONG-TERM OPERATIONS.
5. STOP LINES 18 INCHES WIDE SHALL BE INSTALLED. ADD "NO-PASSING" LINES WHEN NECESSARY. REMOVABLE PAVEMENT MARKINGS MAY BE USED. CONFLICTING PAVEMENT MARKINGS AND RAISED PAVEMENT MARKER REFLECTORS BETWEEN THE ACTIVITY AREA AND THE STOP LINES SHALL BE REMOVED.
6. HAZARD IDENTIFICATION BEACONS OR TYPE A FLASHING WARNING LIGHTS MAY BE MOUNTED WITH WARNING SIGNS, IF WARRANTED.
7. THE VERTICAL ALIGNMENT OF THE ROADWAY MAY REQUIRE ADJUSTMENTS IN THE HEIGHT OF THE SIGNAL HEADS.
8. WHEN THE SIGNAL IS CHANGED TO A FLASH CONDITION EITHER MANUALLY OR AUTOMATICALLY, ALL APPROACHES SHALL FLASH RED.
9. THE USE OF BARRIER IS ANTICIPATED FOR MOST SITUATIONS REQUIRING APPLICATION OF THIS LANE CLOSURE. REQUIRED BARRIER PROTECTION SHALL BE DETERMINED AS DESCRIBED IN THE MOST CURRENT EDITION OF THE ROADSIDE DESIGN GUIDE AS ADOPTED BY THE DEPARTMENT TAPER RATES FOR BARRIER ARE FOUND ON THE PORTABLE CONCRETE BARRIER STANDARD (GR-23).
10. FOR TEMPORARY TRAFFIC BARRIER CRITERIA, SEE SECTION 6F.85 OF THE MUTCD.
11. CRASH CUSHIONS SHALL BE DELINEATED WITH TYPE 3 OBJECT MARKERS. SEE MUTCD FIGURE 2C-13.

NOT TO SCALE

LEGEND

- PORTABLE BARRIER
- SIGNAL HEAD
- IMPACT ATTENUATOR
- CHANNELIZING DEVICES

WORK ZONE TRAFFIC CONTROL

LANE CLOSURE: SIGNALIZED CONTROL WITH BARRIER

STANDARD NO. TC-7

REVISION DATE
08/03/2004
03/16/2017

*.DGN FILE NAME
TC-7

STANDARD PLANS

New Hampshire DOT Department of Transportation

STANDARD NO. TC-7

1 GENERAL

1.1 ALL MATERIALS, WORKMANSHIP, AND DETAILS SHALL CONFORM TO THE NEW HAMPSHIRE STATE BUILDING CODE, THE 2009 INTERNATIONAL BUILDING CODE, NHDOT SPECIFICATIONS AND THE REFERENCE STANDARDS INCLUDED THEREIN THAT ARE APPLICABLE TO THIS PROJECT.

1.2 THE CONTRACTOR SHALL FAMILIARIZE HIMSELF WITH THE CONTRACT DRAWINGS. ANY DISCREPANCIES SHALL BE BROUGHT TO THE ATTENTION OF THE STRUCTURAL ENGINEER BEFORE PROCEEDING WITH THE AFFECTED WORK. ANY VARIATIONS OR SUBSTITUTIONS OF MATERIALS OR DETAILS FROM THOSE INDICATED ON THE DRAWINGS MAY ONLY BE MADE WITH PRIOR APPROVAL OF THE STRUCTURAL ENGINEER. THE CONTRACTOR SHALL BE SOLELY RESPONSIBLE FOR ANY AND ALL CONSTRUCTION MEANS, METHODS, TECHNIQUES, SEQUENCES, PROCEDURES, SHORING AND SAFETY PROGRAMS REQUIRED TO COMPLETE THE WORK OF THIS CONTRACT.

1.3 ALL STRUCTURAL DRAWINGS SHALL BE USED IN CONJUNCTION WITH THE CIVIL AND PROCESS DRAWINGS AND SPECIFICATIONS. VERIFY LOCATION AND DIMENSIONS OF PIPES AND OTHER PROJECT REQUIREMENTS NOT SHOWN ON THE STRUCTURAL DRAWINGS. VERIFY AND COORDINATE ALL DIMENSIONS RELATED TO THIS PROJECT.

1.4 SHOP DRAWINGS ARE REQUIRED TO BE SUBMITTED FOR THE FOLLOWING STRUCTURAL COMPONENTS. SEE INDIVIDUAL MATERIAL SECTIONS FOR ADDITIONAL SUBMITTAL REQUIREMENTS.

STRUCTURAL STEEL
STRUCTURAL STEEL MILL CERTIFICATIONS

SHOP DRAWINGS SHALL BE SUBMITTED TO THE ENGINEER AND A STAMPED APPROVAL RECEIVED BEFORE FABRICATION CAN PROCEED. THE CONTRACTOR SHALL REVIEW AND STAMP ALL SHOP DRAWINGS PRIOR TO SUBMITTAL FOR ENGINEERING REVIEW. SUBMITTED SHOP DRAWINGS WHICH HAVE NOT BEEN REVIEWED AND APPROVED BY THE CONTRACTOR SHALL BE RETURNED UNCHECKED TO THE CONTRACTOR FOR THEIR REVIEW AND APPROVAL. FAILURE TO SUBMIT SHOP DRAWINGS FOR THE REQUIRED MATERIALS SHALL RELIEVE THE ENGINEER OF RESPONSIBILITY AND LIABILITY FOR THOSE PARTS OF THE STRUCTURE AND ANY OTHER PART AFFECTED BY THE UNSUBMITTED PARTS. STRUCTURAL DESIGN DRAWINGS MAY NOT BE USED AS THE SHOP DRAWINGS AND WILL BE IMMEDIATELY REJECTED AND RETURNED IF SO SUBMITTED.

1.5 UNLESS OTHERWISE INDICATED, DETAILS SHOWN ON ANY DRAWING ARE TO BE CONSIDERED TYPICAL FOR ALL SIMILAR CONDITIONS.

1.6 NO MAIN FRAMING OR STRUCTURAL MEMBERS ARE TO BE MODIFIED, ALTERED, OR CUT WITHOUT THE APPROVAL OF THE STRUCTURAL ENGINEER.

1.7 THE CONTRACTOR SHALL BE RESPONSIBLE FOR ANY SHORING REQUIRED TO COMPLETE THE WORK OF THIS CONTRACT.

1.8 THESE DRAWINGS HAVE BEEN COMPILED FROM THE BEST AVAILABLE INFORMATION AND ARE NOT INTENDED TO LIMIT THE SCOPE OF THE WORK. THE CONTRACTOR MAY ENCOUNTER HIDDEN OR UNCOVERED CONDITIONS, NOT SHOWN ON THESE DRAWINGS, REQUIRING ADDITIONAL WORK FOR THE COMPLETION OF THIS CONTRACT. IT WILL BE ASSUMED THAT THE CONTRACTOR HAS INSPECTED THE SITE PRIOR TO BIDDING AND VERIFIED THE INFORMATION HEREIN SUPPLIED.

1.9 THE WEIGHT OF THE EXISTING PIPE SUPPORT HANGERS IS 99± LBS FOR THE 8" NOMINAL PIPE AND INSULATION. THE WEIGHT OF THE NEW PIPE SUPPORT HANGERS IS 77± LBS FOR THE 8" NOMINAL PIPE AND INSULATION AND 97± LBS FOR THE 8" NOMINAL PIPE AND INSULATION.

2 DESIGN LIVE LOADS

2.1 BRIDGE LIVE LOAD – HS20–44 TRUCK LOAD
60 PSF SIDEWALK LIVE LOAD FOR FASCIA GIRDER CAPACITY CHECK

2.2 EXISTING 8" NOMINAL INSULATED WATER PIPE – 77 PLF

3 STRUCTURAL STEEL

3.1 ALL STRUCTURAL STEEL WORK SHALL CONFORM TO "SPECIFICATION FOR STRUCTURAL STEEL BUILDINGS"– AISC, "CODE OF STANDARD PRACTICE FOR STEEL BUILDINGS AND BRIDGES"– AISC, AND "STRUCTURAL WELDING CODE–STEEL"– AWS D1.1.

3.2 STRUCTURAL STEEL PLATES AND BARS SHALL CONFORM TO ASTM A36.

3.3 STEEL TUBES SHALL CONFORM TO ASTM A500, GRADE B.

3.4 STEEL TO STEEL CONNECTION BOLTS SHALL CONFORM TO ASTM A325N AND SHALL BE 3/4" DIAMETER UNLESS NOTED OTHERWISE OR REQUIRED BY THE FABRICATOR'S CONNECTION DESIGN. ALL CONNECTION BOLTS SHALL BE HOT DIP GALVANIZED.

3.5 WELDING ELECTRODES SHALL BE E70XX SERIES.

3.6 ALL STEEL, INCLUDING CONNECTORS, SHALL BE HOT DIP GALVANIZED IN ACCORDANCE WITH ASTM A123 AND A153.

3.7 SHOP FABRICATE ALL MEMBERS AND CONNECTIONS TO MAXIMUM EXTENT POSSIBLE USING WELDING OR BOLTING. USE BOLTED FIELD CONNECTIONS UNLESS SPECIFICALLY NOTED OTHERWISE. ANY AND ALL SHOP WELDING SHALL BE PERFORMED BY AN AWS CERTIFIED WELDER, CERTIFIED FOR THE TYPE AND POSITION OF WELDS TO BE PERFORMED.

3.8 STRUCTURAL STEEL FRAMING SHALL BE TRUE AND PLUMB BEFORE CONNECTIONS ARE FINALLY BOLTED.

4 ABBREVIATIONS

℄	CENTERLINE
EXIST.	EXISTING
H.D.G.	HOT DIPPED GALVANIZED
NOM.	NOMINAL
PL	PLATE
w/	WITH

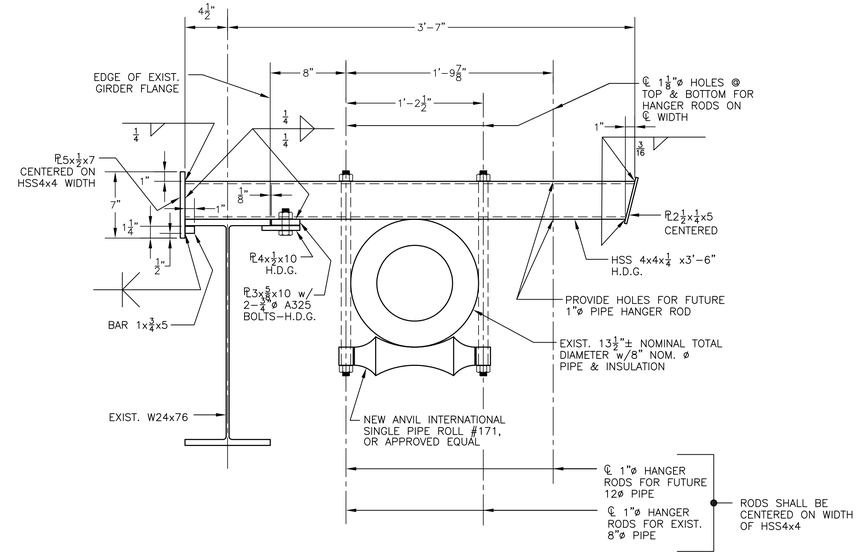

1 EXISTING SECTION
1 1/2" = 1'–0"

TIREY & ASSOCIATES, P.C.
CONSULTING STRUCTURAL ENGINEERS
P.O. BOX 639, LITTLETON, NH 03561
603-444-6151 tirey@tireyassociates.com
217.002.2 ©COPYRIGHT, 2019

ISSUE FOR			
	APPROVAL Date	By	APP'D
	4/9/2019	RHR	
	CONSTRUCTION Date	By	
	–	–	
	RECORD DWG Date	By	
	–	–	

NO.	REVISIONS

Drawn/Chk. RMG
Designed RHR
Checked –
Approved –
Date 3/25/2019
Book No. 2331
Project No.
Dwg. ID.
Scale AS SHOWN

FOR APPROVAL
NOT FOR CONSTRUCTION

UNDERWOOD engineers
25 Vaughan Mall, Portsmouth, N.H. 03801
Tel. 603–436–6192 Fax. 603–431–4733

GENERAL NOTES & SECTION

WATER TRANSMISSION MAIN IMPROVEMENTS PROJECT

TOWN OF NEW CASTLE
NEW CASTLE, NEW HAMPSHIRE

DWG NO S1

SHEET OF 37

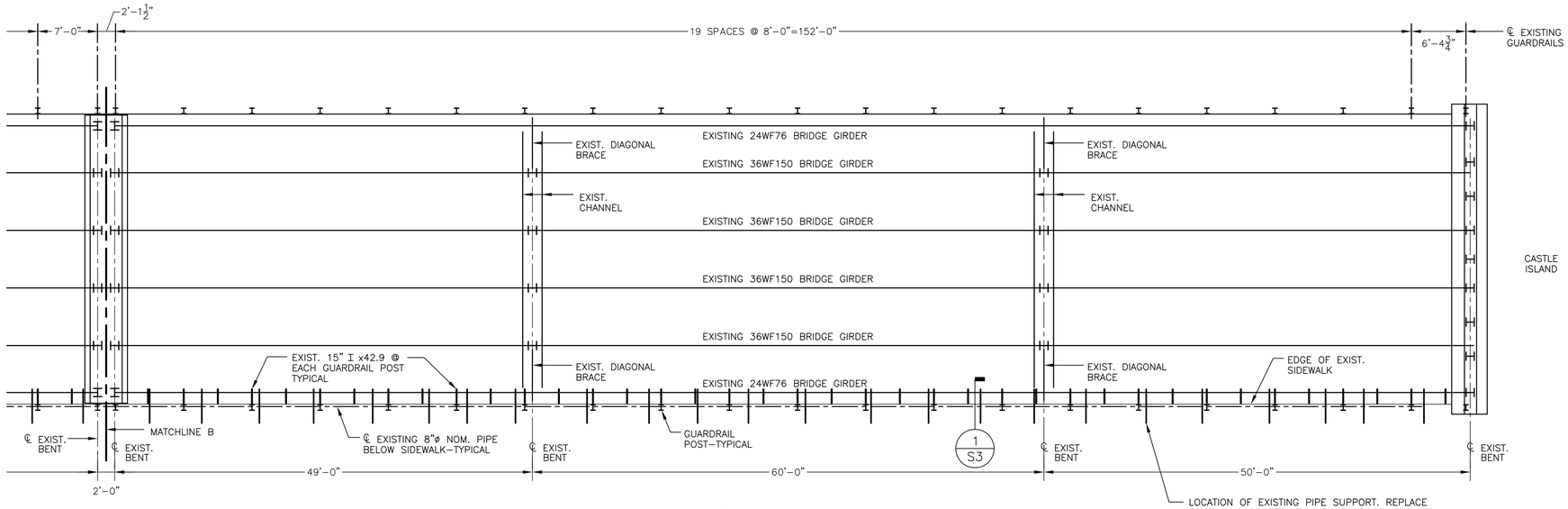

(EAST SECTION)

EXISTING BRIDGE PLAN

SCALE=1/8"=1'-0"

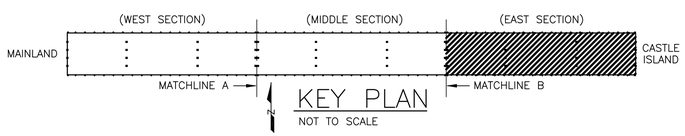

KEY PLAN

NOT TO SCALE

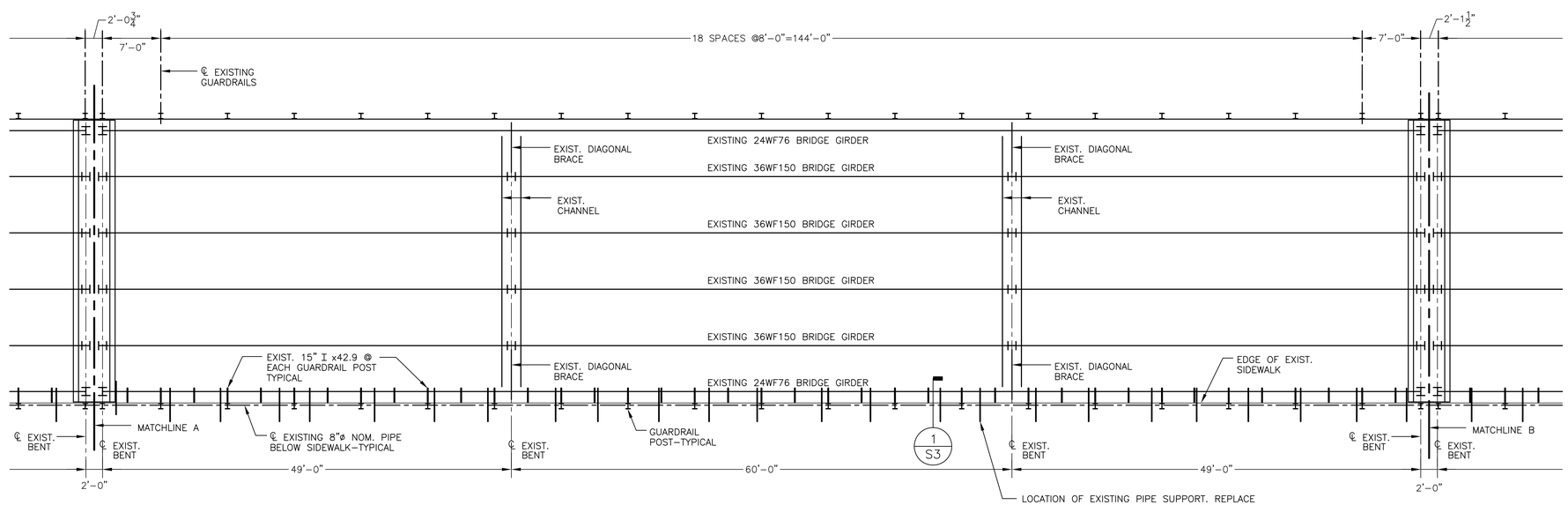

(MIDDLE SECTION)

EXISTING BRIDGE PLAN

SCALE=1/8"=1'-0"

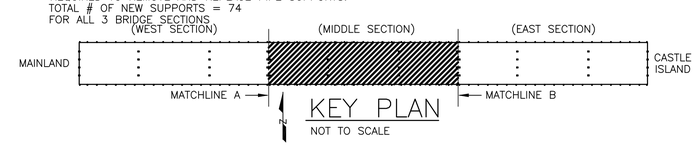

KEY PLAN

NOT TO SCALE

TIREY & ASSOCIATES, P.C.
CONSULTING STRUCTURAL ENGINEERS
P.O. BOX 639, LITTLETON, NH 03561
(603)444-6171 tirey@tireyassociates.com
217.00.2

NO.	REVISIONS	APP'D
△	ISSUE FOR APPROVAL Date 4/9/2019 By RHR	
△	CONSTRUCTION Date – By –	
△	RECORD DWG Date – By –	

Drawn/Chk. RMG
Designed RHR
Checked –
Approved –
Date 3/25/2019
Book No.
Project No. 2331
Dwg. ID.
Scale AS SHOWN

FOR APPROVAL
NOT FOR CONSTRUCTION

UNDERWOOD engineers
25 Vaughan Mall, Portsmouth, N.H. 03801
Tel. 603-436-6192 Fax. 603-431-4733

EXISTING BRIDGE PLAN
031/142

WATER TRANSMISSION MAIN IMPROVEMENTS PROJECT

TOWN OF NEW CASTLE
NEW CASTLE, NEW HAMPSHIRE

DWG NO S2

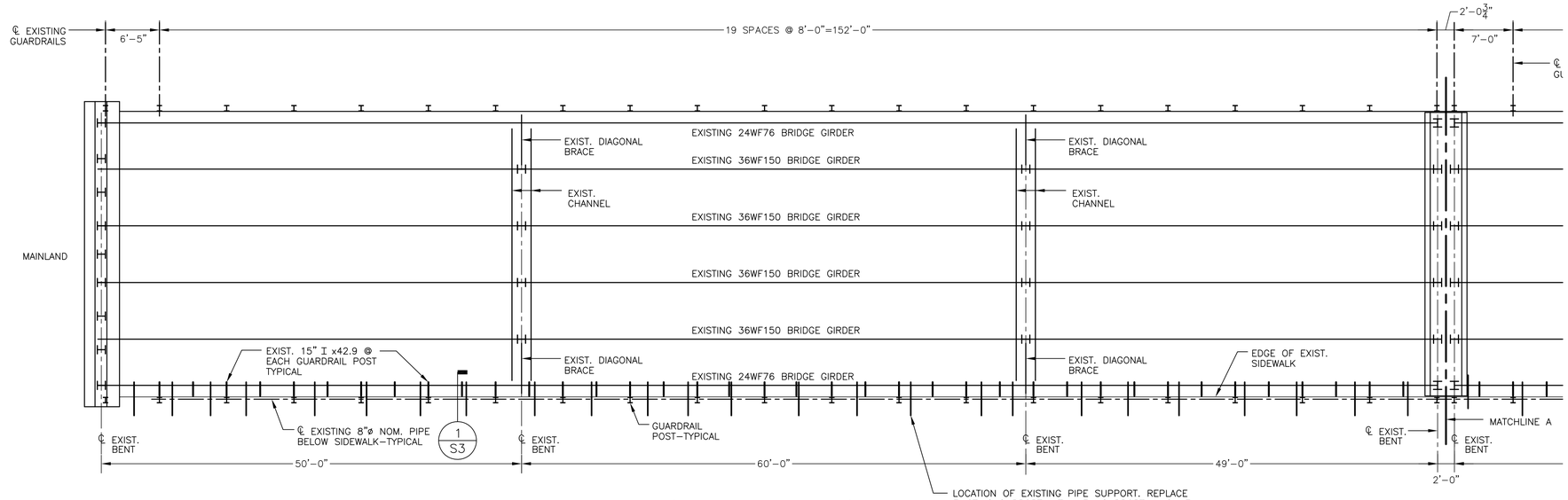

LOCATION OF EXISTING PIPE SUPPORT. REPLACE EXISTING SUPPORT WITH NEW SUPPORT IN SAME LOCATION. SHORE OR SUSPEND EXISTING PIPE AS REQUIRED TO REMOVE AND REPLACE PIPE SUPPORTS. TOTAL # OF NEW SUPPORTS = 74 FOR ALL 3 BRIDGE SECTIONS

(WEST SECTION)

EXISTING BRIDGE PLAN

SCALE=1/8"=1'-0"

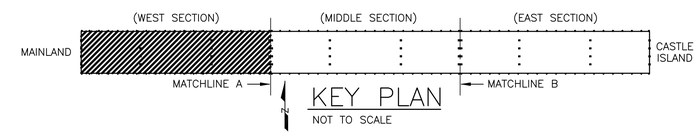

KEY PLAN

NOT TO SCALE

TIREY & ASSOCIATES, P.C.
CONSULTING STRUCTURAL ENGINEERS
P.O. BOX 639, LITTLETON, NH 03561
603-444-6251 tyler@tireyassociates.com
217.002.2

NO.	REVISIONS	ISSUE FOR	APPROVAL	CONSTRUCTION	RECORD DWG	APP'D
			Date 4/9/2019	Date –	Date –	–
			By RHR	By –	By –	

Drawn/Chk. RMG
Designed RHR
Checked –
Approved –
Date 3/25/2019
Book No.
Project No. 2331
Dwg. ID.
Scale AS SHOWN

FOR APPROVAL
NOT FOR CONSTRUCTION

UNDERWOOD engineers
25 Vaughan Mall, Portsmouth, N.H. 03801
Tel. 603-436-6192 Fax. 603-431-4733

EXISTING BRIGE PLAN
031/142

WATER TRANSMISSION MAIN IMPROVEMENTS PROJECT

TOWN OF NEW CASTLE
NEW CASTLE, NEW HAMPSHIRE

DWG NO S3

SHEET OF 37